ALLCONNE®

NTC Thermistor
Varistor
PPTC
PTC

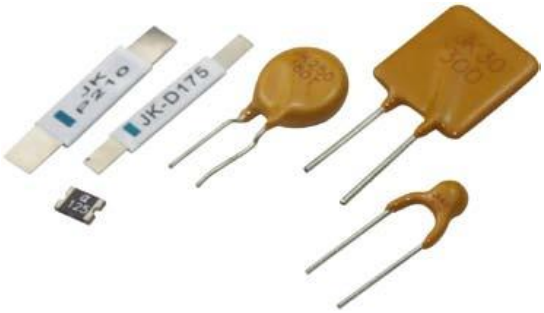

CHANGZHOU RUIYING IMP.&EXP.CORP.LTD.

NTC thermistors & NTC sensor

1.Power thermistors:

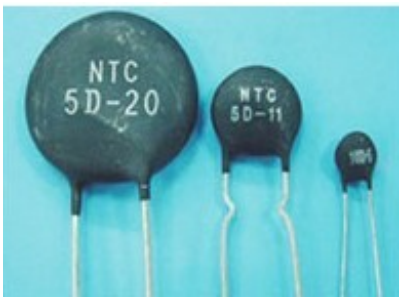

Introduction:

Power type thermistor is the semiconductor ceramic components manufactured mainly by transition metal oxide, belonging to the negative temperature coefficient thermistor. When current is added directly to the power type NTC thermister, its resistance will decrease rapidly with the heating of resistor. As the power type NTC thermistor has a rated zero-power resistance, it can effectively inhibit the surge current upon startup when it is connected in series in the circuit. After it inhibits the surge current, due to the continuous effect of the current passing through it, the resistance of power type NTC thermistor will decrease to a very small degree. As its dissipation power can be neglected, it will not cause very large impact to the normal operating current.

Application:

It is used for inhibiting the surge current of converted power supply, UPS power supply and other equipments.

It is used for inhibiting the surge current of CRT, LCD, power of various electronic devices, and color kinescope.

It is used for controlling the current of motor, various heaters, bulb voltage stabilizer, electronic energy-saving lamp, electronic rectifier and other electronic installations.

Features:

Safe, reliable, stable, with wide range of over-current control

Small size, large power, with strong capacity to inhibit surge current

Large material constant (B value), with small residual resistance

Thermal shock resistance, with wide range of operating temperature

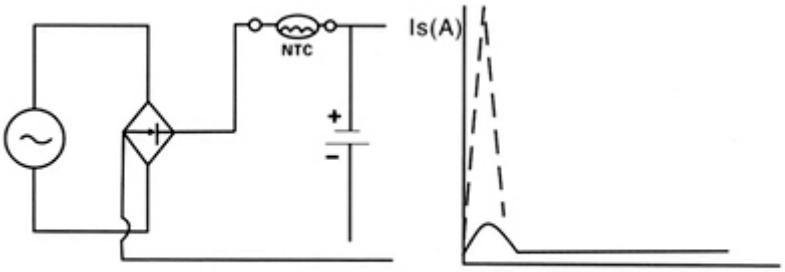

TYPICAL APPLICATION CIRCUIT DIAGRAM

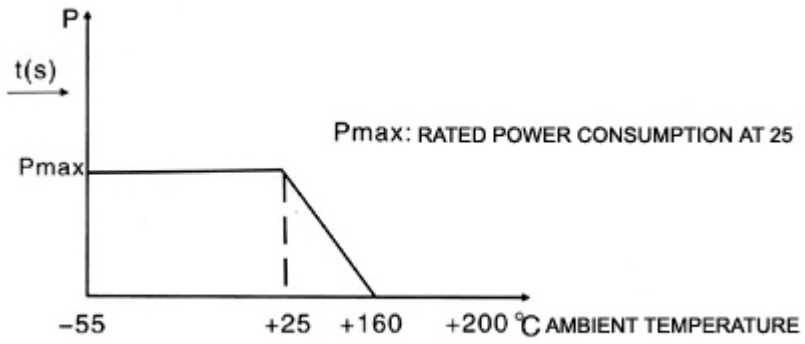

POWER TYPE THERMISTOR LOAD-TEMPERATURE CHARACTERISTIC CURVE

Selection principle of power type NTC thermistors:

Max. working current of resistor ＞ working current of actual loop

Nominal resistance of power type NTC resistor:

$$R \geqslant \frac{\sqrt{2}\,E}{Im}$$

WHERE: E LINE VOLTAGE
IM SURGE CURRENT

For converted power supply, inverted power supply, switch power supply and UPS power supply, Im shall be 100 times of working current.

For reheater loop, Im is taken 30 times of working current. When B value is larger, residual resistance is smaller, and the temperature rising during operation is smaller.

Sign description:

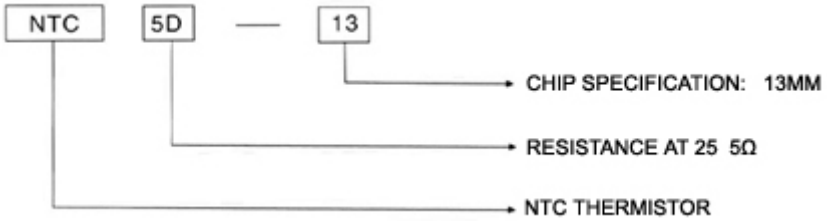

Series specifications		R25℃(Ω)	Maximum steady-state current (A)	Maximum current residual resistance (mΩ)	Dissipation factor(mw/℃)	Time const (s)	working temperature (℃)
Φ5	NTC5D5	5	1	261	7	16	-40~150
	NTC8D5	8	0.8	487	7	16	-40~150

	NTC10D5	10	0.8	642	7	16	-40~150
	NTC16D5	16	0.5	1093	5	16	-40~150
	NTC20D5	20	0.5	1386	5	16	-40~150
	NTC22D5	22	0.3	5560	5	17	-40~150
Φ7	NTC5D7	5	2.0	241	9	23	-40~150
	NTC8D7	8	1.5	436	9	23	-40~150
	NTC10D7	10	1.5	572	9	23	-40~150
	NTC16D7	16	1.5	897	9	23	-40~150
	NTC22D7	22	1.0	1083	8	23	-40~150
Φ8	NTC4D8	4	2.0	261	17	31	-40~150
	NTC5D8	5	3.0	283	17	36	-40~150
	NTC6D8	6	3.0	441	17	36	-40~150
	NTC8D8	8	2.0	520	16	36	-40~150
	NTC10D8	10	2.0	542	17	38	-40~150
	NTC16D8	16	2.0	548	15	38	-40~150
	NTC20D8	20	1.0	1544	17	41	-40~150
	NTC30D8	30	0.5	4094	16	33	-40~150
Φ9	NTC3D9	3	4.0	133	11	35	-40~150
	NTC4D9	4	3.0	191	11	35	-40~150
	NTC5D9	5	3.0	236	11	35	-40~150
	NTC6D9	6	2.0	318	11	35	-40~150
	NTC8D9	8	2.0	382	11	34	-40~150
	NTC10D9	10	2.0	467	12	34	-40~150
	NTC16D9	16	2.0	688	12	32	-40~150
	NTC22D9	22	1.5	899	12	30	-40~150
	NTC25D9	25	1.0	914	12	30	-40~150
	NTC35D9	35	1.0	1103	12	28	-40~150
	NTC50D9	50	1.0	1365	11	28	-40~150
	NTC60D9	60	1.0	1521	11	28	-40~150
	NTC80D9	80	0.8	2108	11	28	-40~150
	NTC100D9	100	0.7	2576	11	28	-40~150
	NTC220D9	220	0.5	5923	10	28	-40~150
Φ10	NTC2R5D10	2.5	5.0	120	18	46	-40~150
	NTC3D10	3	5.0	119	18	45	-40~150
	NTC4D10	4	4.0	161	16	40	-40~150
	NTC5D10	5	4.0	180	17	33	-40~150
	NTC8D10	6	3.0	278	17	43	-40~150
	NTC10D10	10	3.0	297	17	46	-40~150
	NTC12D10	12	3.0	301	18	50	-40~150
	NTC13D10	13	3.0	356	18	49	-40~150
	NTC15D10	15	2.5	442	17	51	-40~150
	NTC16D10	16	2.0	604	18	55	-40~150

	NTC20D10	20	2.0	646	17	54	-40~150
	NTC25D10	25	2.0	674	17	52	-40~150
	NTC30D10	30	2.0	700	17	50	-40~150
	NTC47D10	47	2.0	720	18	49	-40~150
	NTC50D10	50	2.0	1170	18	49	-40~150
	NTC80D10	80	1.0	2236	17	53	-40~150
	NTC100D10	100	1.0	2318	17	45	-40~150
	NTC120D10	120	1.0	2406	19	54	-40~150

Series specifications		R25℃(Ω)	Maximum steady-state current (A)	Maximum current residual resistance (mΩ)	Dissipation factor(mw/℃)	Time const (s)	working temperature (℃)
Φ11	NTC2R5D11	2.5	5	126	13	46	-40~170
	NTC3D11	3.0	5	126	13	46	-40~170
	NTC4D11	4	4	167	13	45	-40~170
	NTC5D11	5	4	228	13	45	-40~170
	NTC6D11	6	3	273	13	46	-40~170
	NTC8D11	8	3	301	13	45	-40~170
	NTC10D11	10	3	395	14	45	-40~170
	NTC16D11	16	2.5	488	14	48	-40~170
	NTC22D11	22	2.5	739	14	46	-40~170
	NTC25D11	25	2	838	14	46	-40~170
	NTC35D11	35	2	906	14	46	-40~170
	NTC50D11	50	1.5	1204	13	48	-40~170
	NTC60D11	60	1.5	1652	13	48	-40~170
	NTC80D11	80	1.3	1865	13	50	-40~170
	NTC100D11	100	1.0	2217	13	52	-40~170
Φ13	NTC0R7D13	0.7	7	33	12	62	-40~170
	NTC1D13	1.0	7	58	12	62	-40~170
	NTC2R5D13	2.5	6	99	13	60	-40~170
	NTC3D13	3.0	6	112	14	60	-40~170
	NTC5D13	5.0	5	136	15	65	-40~170
	NTC6D13	6.0	4	190	15	68	-40~170
	NTC8D13	8	4	256	16	65	-40~170
	NTC10D13	10	4	271	16	60	-40~170
	NTC16D13	16	3.5	368	16	60	-40~170
	NTC22D13	22	3.5	492	16	60	-40~170
	NTC25D13	25	3	527	16	60	-40~170

	NTC35D13	35	3	843	16	58	-40~170
	NTC50D13	50	2	986	16	60	-40~170
	NTC60D13	60	2	1275	17	58	-40~170
	NTC80D13	80	1.8	1498	17	58	-40~170
Φ15	NTC0R1D15	0.1	1.2	22	16	79	-40~170
	NTC0R7D15	0.7	8	37	16	81	-40~170
	NTC1D15	1.0	8	49	17	81	-40~170
	NTC1R7D15	1.5	8	56	18	79	-40~170
	NTC1D15	2.0	7	73	19	76	-40~170
	NTC2D15	2.5	7	87	19	69	-40~170
	NTC3D15	3.0	7	94	19	65	-40~170
	NTC5D15	5.0	6	132	20	76	-40~170
	NTC6D15	60	5	168	20	76	-40~170
	NTC8D15	80	5	196	20	80	-40~170
	NTC10D15	10	5	255	20	80	-40~170
	NTC16D15	16	4	307	19	77	-40~170
	NTC22D15	22	4	393	19	77	-40~170
	NTC25D15	25	4	429	20	76	-40~170
	NTC35D15	35	3.5	610	19	80	-40~170
	NTC50D15	50	3.0	771	19	80	-40~170
Φ20	NTC0R1D20	0.1	15	4	55	112	-40~170
	NTC0R7D20	0.7	12	26	55	109	-40~170
	NTC1D20	1.0	10	43	55	107	-40~170
	NTC2D20	2	9	62	27	88	-40~170
	NTC3D20	3	8.5	79	24	88	-40~170
	NTC5D20	5	8	106	24	86	-40~170
	NTC8D20	8	7	157	23	103	-40~170
	NTC10D20	10	6.5	194	23	118	-40~170
	NTC16D20	16	5.5	236	23	113	-40~170

2.MF11 series:

Introduction:

It is used for general precision temperature measuring devices, and for temperature compensation of transistor circuit, such as that of communication, telegraphic communication, electronic equipment, and precision electronic devices, as well as the overheat protection of auto audio. It is featured by wide resistance range, with maximum nominal resistance up to 2MΩ; wide material constant (B value): 2900 – 4500K; good solderability and impact resistance; and wide working temperature range: -40~120℃

Main technical parameters:

Nominal resistance and allowable deviation (see product list).

Time parameter ≤ 30S

Measuring power ≤ 0.1mW

B value and allowable deviation (see product list)

Dissipation coefficient ≥ 6mW/*S

Rated power is 0.5W.

Sign description:

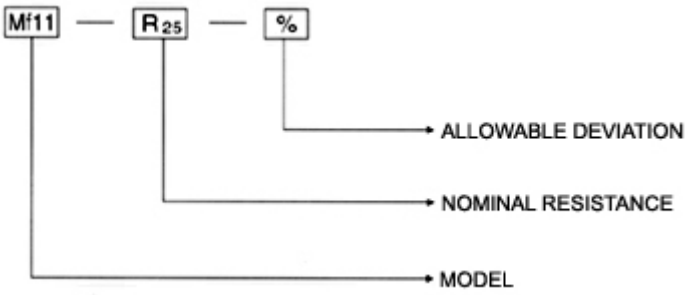

3.MF52 series:

MF52 droplet temperature measuring type NTC thermistor is the negative temperature coefficient thermistor encapsulated by epoxy resin, and is featured by small size, high precision, quick response and stable performance.

Application:

It is widely applied to air conditioner, heating installation, electric thermometer, liquid level sensor, automotive electronics, electronic calendar, office facilities, and cell phone batteries.

Sign description:

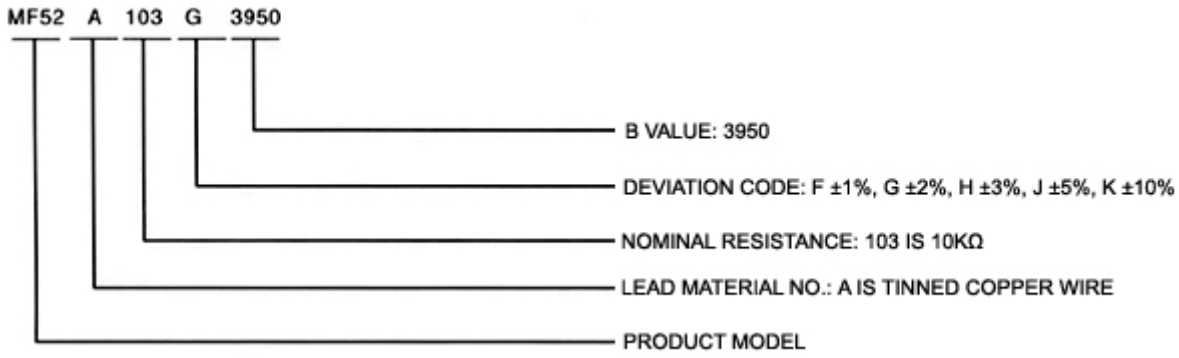

Structure and dimension:

Type A: (the lead is the tinned copper wire or silver-coated, nickel-coated copper wire)

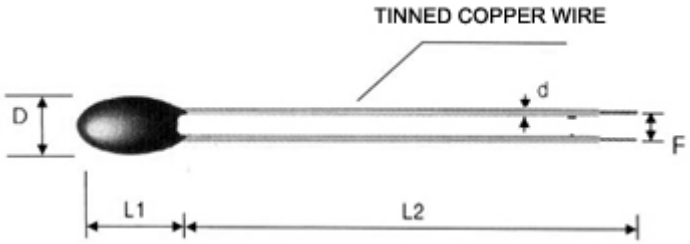

Type B: (the lead is the enameled wire)

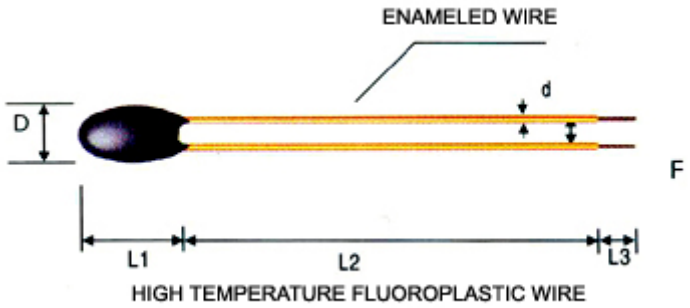

Type C: (lead is the high temperature fluoroplastic wire)

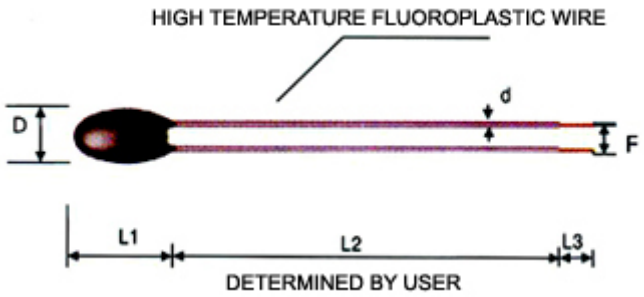

Type D: (lead is the PVC wire)

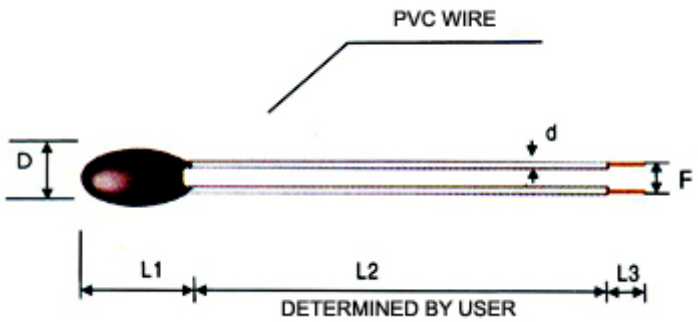

Type E: (lead and drum head are with special specification)

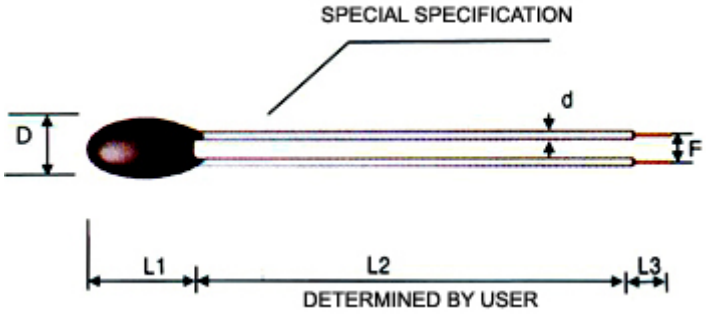

4.NTC Sensor:

Introduction:
High precision, sensitivity and reliability NTC thermistor is connected with PVC wire, and is encapsulated into various types with insulated, heat-conductive and water-proof epoxy, so it is easier for installation and remote temperature control and measuring.

Application:
It is applied to household appliances such as air conditioner, refrigerator, ice box, water heater, drinking water dispenser, fan heater, laundry drier, and foot bathtub; industrial instrument and other occasions required for temperature measuring and control.

Features:
● The product is suitable for long-term operation with stable performance.
● It is with high precision electrical parameters, good sensitivity and quick response.
● It is with good sealing performance and reliable structure.
● The overall dimension can be selected, thus easy for installation.
● It can be manufactured into high dissipated product to simplify test circuit.
● Overall structure and dimension:
Sign description:

CWF1 103 F 3950

CWF=NTC temperature sensor 1= Encapsulation types of sensing head: 1- epoxy, 2-metal shell, 3-plastic shell, 4-with fixed metal, 5-special encapsulation. 103=Nominal resistance: 103 is 10 KΩ. F=Resistance precision: F: ±1％ G: ±2％ H: ±3％ J: ±5％ K: ±10％.3950=B value (25/50℃): 3950K

CWF1&CWF2.....4:




NTC Thermistor

Enameled lead wire NTC Thermistor

AT Series

Features:

•Ø0.18mm, Ø0.27mm, Ø0.3mm different enameled lead wire, could fully meet what your need
•Could be customized according to the requirement of the customers
•Quick thermal sensing response and high delicacy
•High resistance precision and good coherence
•High working stability and reliability
•Small size and light weight

Application:

Digital Thermometer, Medical Devices, Computer, transformer and so on.

Specification:

•The range of resistance under the rated zero power (R25℃): 0.1~1000KΩ
•The allowable tolerance of R25℃: ±0.5%、±1%、±2%、±3%、±5%、±10%
•The range of B value (K): 3100～4500K
•The allowable tolerance of B value: ±0.5%、±1%、±2%
•The range of operating temperature: -30℃ ~ +120℃
•Dissipation factor: ≥0.7mW/℃ (In Still Air)
•Thermal time constant: ≤3.2S (In Still Air)
•Encapsulated: Enameled wire
•Dimension: Epoxy head ≤1.3mm

NTC Thermistor

MF58

MF58 series are purified glass wrapped diode thermistors with two terminals extending axially, processed with the combination of ceramic and semiconductor techniques.

Features:

•Purified glass encapsulated NTC thermistor with radial lead extending.
•Wide range of resistance & Beta value with high resistance precision.
•Usable in high-temperature and high-moisture environments due to the glass wrapping.
•Small, light, firm structure and convenient for automation mounting on PCB.
•Quick response to thermal sensing with high sensitivity.
•High working stability and reliability.

Applications:

•Temperature compensation and detection of household appliance (e.g. induction cooker, microwave ovens, electric fans, electric heaters, etc.)
•Temperature compensation and detection of office automation facilities (e.g. copiers, printers, etc.)
•Temperature compensation and detection of the industrial, medical, environmental protection, weather and food processing equipment.
•Liquid level display and flow rate measurement.
•Mobile phone battery.
•Temperature compensation of apparatus coils, integrated circuits, quartz crystal oscillators and thermocouples.

Specification:

•The range of resistance under the rated zero power (R25℃): 0.1 ~ 1000 KΩ
•The allowable tolerance of R25℃: ±0.5%、±1%、±2%、±3%、±5%、±10%
•The range of B value (B25/50℃): 3100 ~ 4500K
•The allowable tolerance of B value: ±0.5%、±1%、±2%
•The range of operating temperature: -40℃ ~ +250℃
•Dissipation factor: ≥2mW/℃ (In Still Air)
•Thermal time constant: ≤20S (In Still Air)
•Encapsulated: Axial Lead
•Dimension: Glass: 2*4mm max.; Lead wire: ø0.5mm; Total length: 58mm

NTC Thermistor
MF57

Features:

•Purified glass encapsulated NTC thermistor with radial lead extending.
•Wide range of resistance & Beta value with high resistance precision.
(R25 C=1.0~1000KΩ, B25/85 C=2000~4500K)
•Wide range of operating temperature from -55℃ up to 300℃.
•Usable in high-temperature and high-moisture environments due to the glass wrapping.
•Small, light, firm structure and convenient for automation mounting on PCB.
•Quick response to thermal sensing with high sensitivity.
•High working stability and reliability.

Applications:

•Induction cookers, microwave, ovens, electric fans, electric heaters, copiers, printers, and cell phone battery…..
•Industrial, medical, environmental protection; weather, food processing equipments; apparatus coils, integrate circuits, quartz crystal oscillators and thermocouples……

Specification:

•The range of resistance under the rated zero power (R25℃): 0.1 ~ 1000 KΩ
•The allowable tolerance of R25℃: ±0.5%、±1%、±2%、±3%、±5%、±10%
•The range of B value (B25/50℃): 3100 ~ 4500K
•The allowable tolerance of B value: ±0.5%、±1%、±2%
•The range of operating temperature: -50℃ ~ +300℃
•Dissipation factor: ≥2mW/℃ (In Still Air)
•Thermal time constant: ≤20S (In Still Air)
•Encapsulated: Radial Lead

PPTC

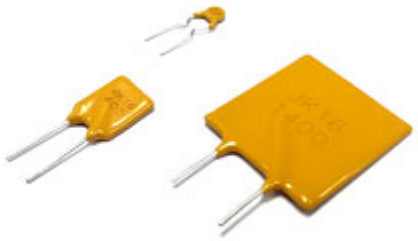

Characteristic

1. meet RoHS and halogen free requirements.

2. radial lead

3. self refolding device suitable for industrial applications

4. maintain current: 0.1 ~ 14A

5. maximum working voltage: 6Vdc/16Vdc

6. working / storage temperature range: -40 ~ +85 C

7. safety certification: UL / TUV

purpose

1. motor / fan

2. keyboard / mouse

3. transformer

4. industrial control equipment

型号 Model	维持电流 I_{Hold}(A)	动作电流 I_{Trip} (A)	最大工作电压 Vmax	最大工作电流 Imax	功率损耗 $P_{d\ Max}$	最大动作时间 Maximum Time to Trip		阻值 Resistance（mΩ）	
			V（DC）	A	W	电流 Current（A）	时间 Time（S）	R_{min}	R_{max}
JK16-010(T)	0.1	0.3	16	100	0.38	0.5	5	1500	7500
JK16-025(T)	0.25	0.5	16	100	0.45	1.25	5	500	1950
JK16-030(T)	0.3	0.6	16	100	0.49	1.5	5	300	700
JK16-050(T)	0.5	1.0	16	100	0.56	2.5	5	200	500
JK16-075(T)	0.75	1.5	16	100	0.72	3.75	5	100	260
JK16-090(T)	0.9	1.8	16	100	0.83	4.5	5	90	180
JK16-110(T)	1.1	2.2	16	100	0.94	5.5	5	60	150
JK16-135(T)	1.35	2.7	16	100	1.2	6.75	5	40	130
JK16-160(T)	1.6	3.2	16	100	1.4	8	5	40	110
JK16-200(T)	2	4	16	100	2.2	6	15	35	75
JK16-300	3	6	16	100	2.3	9	15	20	60
JK16-400	4	8	16	100	2.4	12	15	20	40
JK16-500	5	10	16	100	2.6	15	15	14	25

JK16-600	6	12	16	100	2.8	18	15	10	21
JK16-700	7	14	16	100	3.0	21	15	8	15
JK16-800	8	16	16	100	3.0	24	15	6	13
JK16-900	9	18	16	100	3.3	27	25	4	12
JK16-1000	10	20	16	100	3.7	30	30	4	11
JK16-1100	11	22	16	100	3.7	33	30	3	9
JK16-1200	12	24	16	100	4.2	36	30	3	8
JK16-1300	13	26	16	100	4.2	39	50	3	8
JK16-1400	14	28	16	100	4.2	40	50	3	7

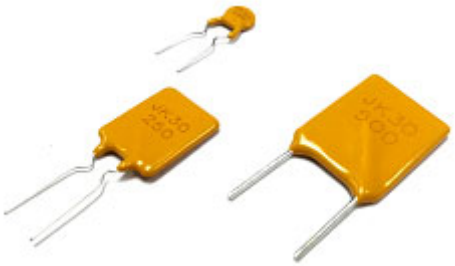

Characteristic

1. meet RoHS and halogen free requirements.

2. radial lead

3. self refolding device suitable for industrial applications

4. maintain current: 0.5~ 9A

5. maximum working voltage: 30Vdc

6. working / storage temperature range: -40 ~ +85 C

7. safety certification: UL / TUV

purpose

1. motor / fan

2. keyboard / mouse

3. transformer

4. industrial control equipment

5. automotive electronics

型号 Model	维持电流 I_{Hold}(A)	动作电流 I_{Trip} (A)	最大工作电压 Vmax	最大工作电流 Imax	功率损耗 $P_{d\ Max}$	最大动作时间 Maximum Time to Trip		阻值 Resistance（mΩ）	
			V（DC）	A	W	电流 Current （A）	时间 Time（S）	R_{min}	R_{max}
JK30-050	0.5	1.0	30	40	0.5	2.5	5.0	250	600
JK30-075	0.75	1.5	30	40	0.6	3.75	5.0	200	370
JK30-090	0.90	1.8	30	40	0.7	4.5	8.0	100	220
JK30-11	1.10	2.2	30	40	0.7	5.5	8.0	70	200

0									
JK30-120	1.20	2.4	30	40	0.8	6.0	8.0	80	180
JK30-135	1.35	1.7	30	40	0.8	6.75	8.0	70	160
JK30-160	1.60	3.2	30	40	0.9	8.0	8.0	60	140
JK30-185	1.85	3.7	30	40	1.0	9.25	8.0	50	120
JK30-200	2.00	4.0	30	40	1.2	10.0	11	40	100
JK30-250	2.50	5.0	30	40	1.2	12.5	11	30	80
JK30-300	3.00	6.0	30	40	2.0	15.0	11	30	70
JK30-400	4.00	8.0	30	40	2.5	20.0	12.7	10	60
JK30-500	5.00	10	30	40	3.0	25.0	14.5	10	50
JK30-600	6.00	12	30	40	3.5	30.0	16	5	40
JK30-700	7.00	14	30	40	3.8	35.0	17.5	5	30
JK30-800	8.00	16	30	40	4.0	40.0	18.8	5	25
JK30-900	9.00	18	30	40	4.2	40.0	20	5	20

Characteristic

1. meet RoHS and halogen free requirements.
2. radial lead
3. self refolding device suitable for industrial applications
4. maintain current: 0.05~ 5.0A
5. maximum working voltage: 60Vdc

6. working / storage temperature range: -40 ~ +85 C

7. safety certification: UL / TUV

purpose

1. motor / fan

2. keyboard / mouse

3. transformer

4. industrial control equipment

5. automotive electronics

型号 Model	维持电流 I_{Hold}(A)	动作电流 I_{Trip} (A)	最大工作电压 Vmax	最大工作电流 Imax	功率损耗 $P_{d\ Max}$	最大动作时间 Maximum Time to Trip		阻值 Resistance（mΩ）	
			V（DC）	A	W	电流 Current（A）	时间 Time（S）	R_{min}	R_{max}
JK60-005	0.05	0.15	60	40	0.26	0.25	8.0	7.3	20
JK60-010	0.10	0.3	60	40	0.38	0.5	5.0	2.5	7.5
JK60-017	0.17	0.34	60	40	0.48	0.85	5.0	2	5.21
JK60-020	0.2	0.4	60	40	0.41	1.0	5.0	1.5	2.84
JK60-025	0.25	0.5	60	40	0.45	1.25	5.0	1.0	1.95
JK60-030	0.30	0.6	60	40	0.49	1.5	5.0	0.76	1.38
JK60-040	0.40	0.8	60	40	0.56	2.0	5.0	0.45	0.88
JK60-050	0.50	1.0	60	40	0.77	2.5	5.0	0.40	0.79
JK60-065	0.65	1.3	60	40	0.88	3.25	5.0	0.31	0.50
JK60-075	0.75	1.5	60	40	0.92	3.75	5.0	0.25	0.42
JK60-090	0.90	1.8	60	40	0.99	4.5	5.0	0.20	0.33
JK60-110	1.10	2.2	60	40	1.5	5.5	8.0	0.15	0.27
JK60-135	1.35	2.7	60	40	1.7	6.75	8.0	0.12	0.21
JK60-160	1.60	3.2	60	40	1.9	8.0	8.0	0.09	0.16
JK60-185	1.85	3.7	60	40	2.1	9.25	8.0	0.08	0.14
JK60-200	2.00	4.0	60	40	2.3	10.0	8.0	0.07	0.14
JK60-250	2.50	5.0	60	40	2.5	12.5	8.0	0.05	0.10
JK60-300	3.00	6.0	60	40	2.8	15.0	8.0	0.04	0.08
JK60-375	3.75	7.5	60	40	3.2	18.75	24.0	0.03	0.06
JK60-500	5.00	10	60	40	3.5	25.0	24.0	0.02	0.06

Characteristic

1. meet RoHS and halogen free requirements.
2. radial lead
3. self refolding device suitable for industrial applications
4. maintain current: 0.1~ 2.5A
5. maximum working voltage: 130Vdc
6. working / storage temperature range: -40 ~ +85 C
7. safety certification: UL / TUV

purpose

1. motor / fan
2. keyboard / mouse
3. transformer
4. industrial control equipment
5. automotive electronics

型号 Model	维持电流 I_{Hold}(A)	动作电流 I_{Trip} (A)	最大工作电压 Vmax V（DC）	最大工作电流 Imax A	功率损耗 $P_{d\ Max}$ W	最大动作时间 Maximum Time to Trip		阻值 Resistance（mΩ）
						电流 Current（A）	时间 Time（S）	R_{min}- R_{max}
JK130-010	0.10	0.20	130	3	0.8	0.5	6	2.5-9.0
JK130-015	0.15	0.30	130	3	0.8	0.75	5.5	2.5-7.5
JK130-017	0.17	0.34	130	3	0.8	0.85	5.2	1.5-7.0
JK130-020	0.20	0.40	130	3	0.8	1.0	5.0	1.9-4.0
JK130-025	0.25	0.50	130	3	1.0	1.25	4.8	1.45-3.50
JK130-030	0.30	0.60	130	3	1.0	1.5	4.5	1.0-3.0
JK130-040	0.40	0.80	130	3	1.0	2.0	4.5	0.75-2.0
JK130-050	0.50	1.0	130	3	1.0	2.5	5.0	0.50-1.60
JK130-065	0.65	1.3	130	10	1.0	3.25	5.2	0.45-1.0
JK130-075	0.75	1.5	130	10	1.0	3.75	5.5	0.40-0.90
JK130-090	0.90	1.8	130	10	1.5	4.5	5.8	0.30-0.70
JK130-110	1.10	2.2	130	10	1.8	5.5	6.3	0.20-0.65
JK130-135	1.35	2.7	130	10	1.8	6.75	7.5	0.15-0.60
JK130-160	1.60	3.2	130	10	2.0	8.0	8	0.10-0.50
JK130-185	1.85	3.7	130	10	2.0	9.25	9	0.10-0.40

JK130-200	2.00	4.0	130	10	2.2	10.0	10	0.10-0.30
JK130-250	2.50	5.0	130	10	2.5	12.5	12	0.05-0.25

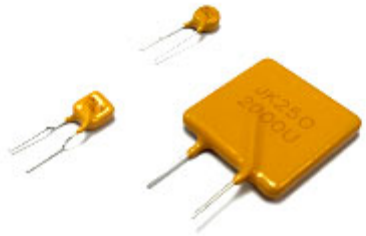

Characteristic

1. meet RoHS and halogen free requirements.
2. maintain current: 0.02 ~ 2.0A
3. high voltage tolerance: 250Vdc
4. resetting of overcurrent protection
5. working / storage temperature range: -40 C ~ +85 C
6. safety certification: UL /TUV

purpose

1. Telecommunications
2. network devices
3. set-top box

型号 Model	维持电流 I_{Hold}(A)	动作电流 I_{Trip} (A)	最大工作电压 Vmax V（DC）	最大工作电流 Imax A	功率损耗 $P_{d\ Max}$ W	最大动作时间 Maximum Time to Trip		阻值 Resistance（mΩ）
						电流 Current（A）	时间 Time（S）	R_{min}- R_{max}
JK250-020U	20	45	250	3	1.0	0.5	0.5	80-160
JK250-030U	30	65	250	3	1.0	0.5	0.5	60-120
JK250-040U	40	80	250	3	1.0	0.5	1.5	30-60
JK250-050U	50	100	250	3	1.0	0.5	2	25-50
JK250-060U	60	120	250	3	1.0	0.5	2	20-60
JK250-080U	80	160	250	3	1.0	1	0.5	12-22
JK250-090U	90	180	250	3	1.0	1	0.8	10-20
JK250-100U	100	200	250	3	1.0	1	1	10-20
JK250-110U	110	220	250	3	1.0	1	2.0	6-12
JK250-120U	120	240	250	3	1.0	1	2.0	6-11
JK250-145U	145	290	250	3	1.0	1	5.0	3.5-6.5
JK250-180T	180	650	250	3	1.8	3	3.0	1.0-2.2
JK250-180U	180	650	250	3	1.8	3	1.5	2.0-4.0

JK250-200U	200	400	250	5	2.4	3	5	3-6
JK250-400U	400	800	250	5	2.8	3	8	1-3
JK250-600U	600	1200	250	5	3.2	3	12	0.6-2.0
JK250-800U	800	1600	250	5	3.6	4	18	0.4-1.0
JK250-1000U	1000	2000	250	7	3.6	5	20	0.3-0.8
JK250-1200U	1200	2400	250	7	3.6	6	20	0.2-0.8
JK250-1500U	1500	3000	250	7	4.8	7.5	20	0.2-0.6
JK250-2000U	2000	4000	250	10	4.8	10	20	0.2-0.4

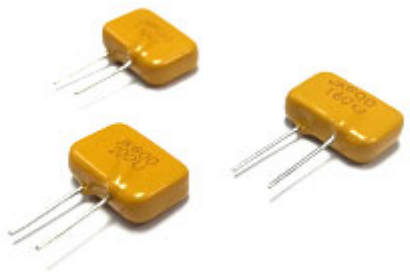

Characteristic

1. meet RoHS and halogen free requirements.
2. maintain current: 0.11 ~ 0.16A
3. high voltage tolerance: 600Vdc
4. resetting of overcurrent protection
5. working / storage temperature range: -40 C ~ +85 C
6. safety certification: UL /TUV

purpose

1. Telecommunications
2. network devices
3. set-top box

型号 Model	维持电流 I_{Hold}(A)	动作电流 I_{Trip} (A)	最大工作电压 Vmax V（DC）	最大工作电流 Imax A	功率损耗 $P_{d\ Max}$ W	最大动作时间 Maximum Time to Trip		阻值 Resistance（mΩ）
						电流 Current（A）	时间 Time（S）	R_{min}- R_{max}
JK600-110U	0.11	0.22	600	3	1.0	1.0	8	6-16
JK600-150U	0.15	0.30	600	3	1.0	1.0	9	5-14
JK600-160U	0.16	0.32	600	3	1.0	1.0	10	4-12

PPTC for Battery

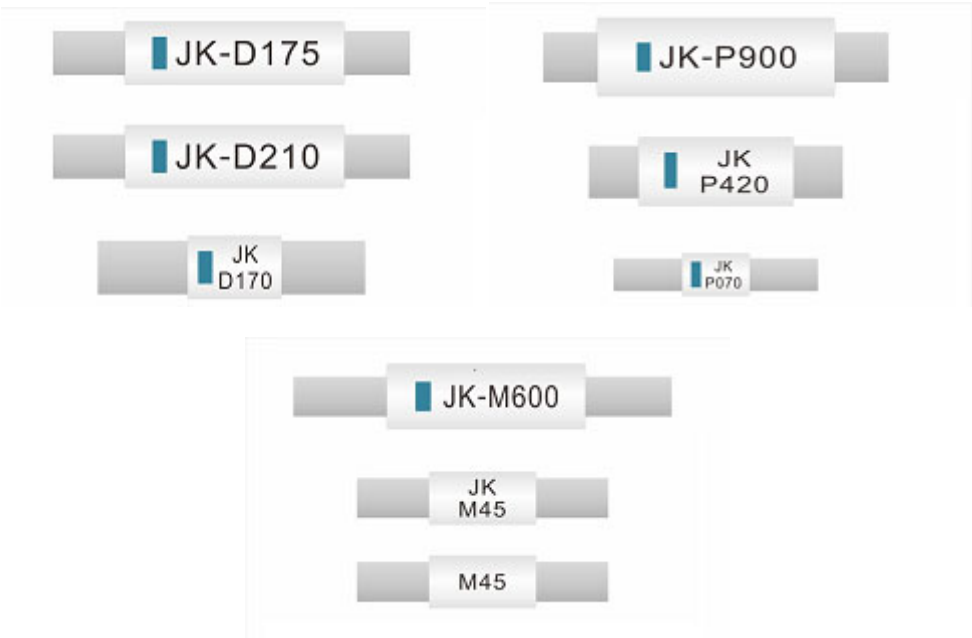

Characteristic:

Customized pins are drawn from the axial direction of the PPTC chip.

The wrapping paper or dipping treatment can be added according to the customers' requirements, and the environment is well tolerated.

According to customer requirements, pin forms can be designed, such as bending, bending and so on, to adapt to the complex connection and folding of the protective plate and the battery.

Use:

It is applied to battery protection of 3C products such as mobile phones. It has a thin type customized pin. It can be attached to batteries or protective panels on a large scale, sensitive to temperature and fast protection.

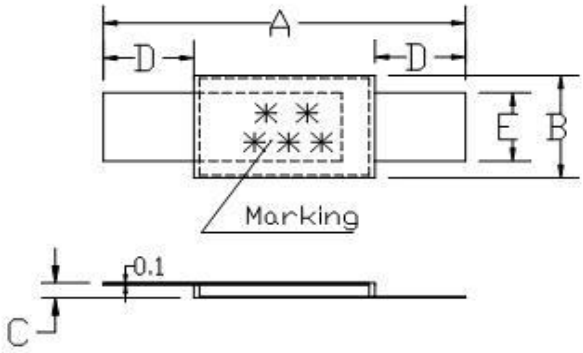

JK-D

Model	A		B		C		D		E	
	Min	Max	Min	Max	Min	Max	Min	Max	Min	Max
JK-D170	15.4	17.5	6.9	7.4	0.50	1.00	5.0	6.2	3.8	4.2
JK-D175	21.9	24.5	3.0	3.6	0.50	1.00	4.5	5.5	2.3	3.2

JK-D200	21.9	24.5	3.0	3.6	0.50	1.00	4.5	5.5	2.3	3.2
JK-D210	21.9	24.5	3.0	3.6	0.50	1.00	4.5	5.5	2.3	3.2

JK-P

Model	I_{hold}	I_{trip}	V_{max}	I_{max}	P_d	I_{trip}	T_{trip}	R_{min}	R_{max}	R_{1max}
	(A)	(A)	(V)	(A)	(W)	Current(A)	Time(S)	(Ω)	(Ω)	(Ω)
JK-P070	0.70	1.45	16	100	1.60	3.5	5.0	100	200	400
JK-P100	1.00	2.50	16	100	1.60	5.0	5.0	70	130	260
JK-P120	1.20	2.70	16	100	1.60	6.0	5.0	60	120	240
JK-P175	1.75	3.80	16	100	1.60	8.5	5.0	30	65	130
JK-P180	1.80	3.80	16	100	1.60	9.0	5.0	30	60	120
JK-P190	1.90	4.20	16	100	1.60	9.5	5.0	25	45	90
JK-P200	2.00	4.40	16	100	1.60	10.0	5.0	20	40	80
JK-P210	2.10	4.40	16	100	1.60	10.5	5.0	20	35	70
JK-P260	2.60	5.20	16	100	1.60	13.0	5.0	15	30	60
JK-P300	3.00	6.30	24	100	2.40	15.0	5.0	15	31	62
JK-P350	3.50	7.00	24	100	2.40	17.5	5.0	17	31	62
JK-P380	3.80	7.60	24	100	2.40	19.0	5.0	13	22	44
JK-P420	4.20	8.30	24	100	2.00	21.0	5.0	12	24	48
JK-P450	4.50	9.00	20	100	2.00	22.5	5.0	11	20	40
JK-P550	5.50	10.50	20	100	2.00	27.5	5.0	9	16	32
JK-P600	6.00	11.70	20	100	2.80	30.0	5.0	7	14	28
JK-P730	7.30	14.10	20	100	3.30	36.5	5.0	5	12	24
JK-P900	9.00	16.70	20	100	3.80	45.0	5.0	6	10	20
JK-P1410	14.10	26.20	20	100	6.00	70.5	5.0	3	5	10

JK-M

Model	A		B		C		D		E	
	Min	Max	Min	Max	Min	Max	Min	Max	Min	Max
JK-M120	13	15	3.0	3.6	0.6	1.0	3.5	5.5	2.2	2.4
JK-M140	13	15	3.0	3.6	0.6	1.0	3.5	5.5	2.2	2.4
JK-M175	13	15	3.0	3.6	0.6	1.0	3.5	5.5	2.2	2.4
JK-M190	13	15	3.0	3.6	0.6	1.0	3.5	5.5	2.2	2.4
JK-M210	13	15	3.0	3.6	0.6	1.0	3.5	5.5	2.2	2.4
JK-M260	13	15	3.0	3.6	0.6	1.0	3.5	5.5	2.2	2.4
JK-M270	13	15	3.0	3.6	0.6	1.0	3.5	5.5	2.2	2.4
JK-M300	13	15	3.0	3.6	0.6	1.0	3.5	5.5	2.2	2.4
JK-M350	14.5	17	3.0	3.6	0.6	1.0	3.5	5.5	2.2	2.4
JK-M370	14.5	17	3.0	3.6	0.6	1.0	3.5	5.5	2.2	2.4
JK-M400	14.5	17	3.0	3.6	0.6	1.0	3.5	5.5	2.2	2.4
JK-M430	14.5	17	3.0	3.6	0.6	1.0	3.5	5.5	2.2	2.4
JK-M450	21.5	23.3	3.50	3.90	0.55	1.0	4.5	6.5	2.2	2.4

JK-M500	21.5	23.3	3.50	3.90	0.55	1.0	4.5	6.5	2.2	2.4
JK-M550	21.5	23.3	3.50	3.90	0.55	1.0	4.5	6.5	2.2	2.4
JK-M600	20.9	23.1	4.6	5.5	0.60	1.00	4.0	6.0	3.8	4.2
JK-M650	20.9	23.1	4.6	5.5	0.60	1.00	4.0	6.0	3.8	4.2
JK-M700	20.9	23.1	4.6	5.5	0.60	1.00	4.0	6.0	3.8	4.2
JK-M730	20.9	23.1	4.6	5.5	0.60	1.00	4.0	6.0	3.8	4.2
JK-M800	20.9	23.1	4.6	5.5	0.60	1.00	4.0	6.0	3.8	4.2
JK-M850	20.9	23.1	4.6	5.5	0.60	1.00	4.0	6.0	3.8	4.2
JK-M900	20.9	23.1	4.6	5.5	0.60	1.00	4.0	6.0	3.8	4.2
JK-M950	20.9	23.1	4.6	5.5	0.60	1.00	4.0	6.0	3.8	4.2
JK-M1000	20.9	23.1	4.6	5.5	0.60	1.00	4.0	6.0	3.8	4.2

PTC HEATING

Description: PTC heating is a kind of positive temperature coefficient of semiconductors functional ceramics

◆FEATURES

PTC heating is a kind of positive temperature coefficient of semiconductors functional ceramics. Once more than PTC thermistor materials transition temperature (Tc), the rise of resistance with temperature of PTC heating element is almost a higher step type, this is called the PTC effect. According to the voltage and current characteristics of PTC, use PTC effect, according to the different transformation temperature, different temperature coefficient, can produce the different USES of PTC heating piece. PTC heating has high reliability, consistency, good stability, easy to use, safe, long life and other advantages, widely used in household appliances, electronic equipment, etc.

◆PRODUCT MODEL

K	Y	240/851	150/281	211/300	- 102R	N/H	400	S/T250
1	2	3	4	5	6	7	8	9

1. K
2. Y=Disc F=Diamond
3. 240/851 L/D 240=24mm，851=8.5mm
4. 150/281 W 150=15mm，281=2.8mm
5. 211/300 T 211=2.1mm，300=3.0mm
6. 102R R 102=10*100
7. N/H N=±30%,H=限定误差
8. 400 MAX V 400=400V
9. S/T250 S250=Surface T 250，T250=Curie T 250

THERMOSTAT THERMAL PROTECTOR

MOSQUITO REPELLENT

HOT MELT GLUE GUN

REGULAR MODEL

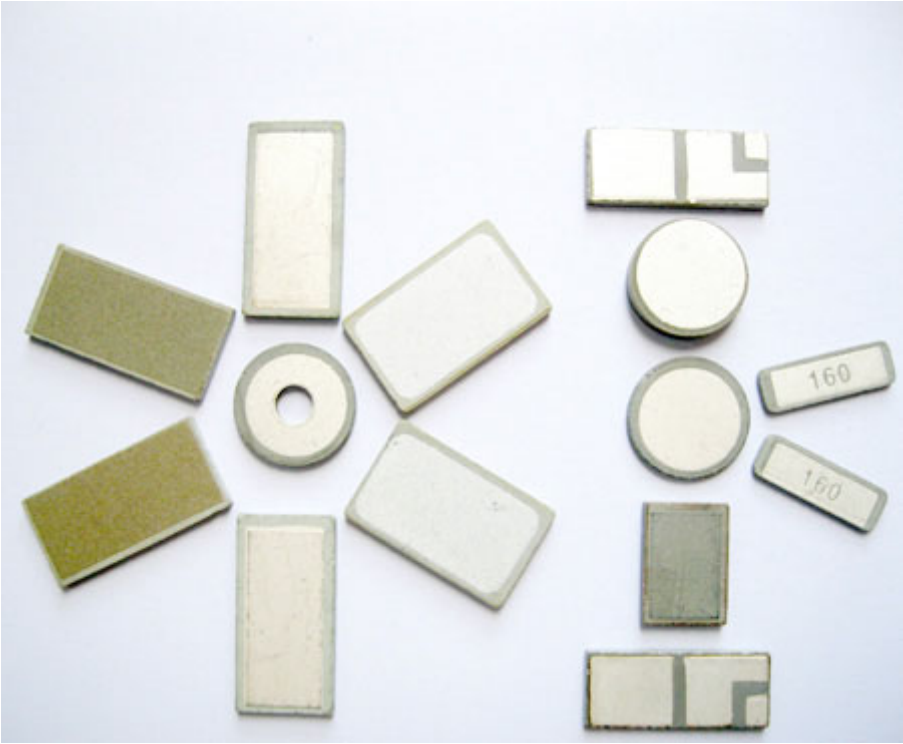

☆ Designed according to customers request special customized specifications Product.。

SMD NTC THERMISTORS

Features: small size, suitable for high density surface mount. Glass glaze coating protection, high precision, small resistance drift. Excellent weldability and solderability, suitable for wave soldering and reflow soldering. Application: rechargeable battery and temperature detection of CPU. Temperature compensation for IC, LCD and quartz oscillator. Various circuits that require temperature compensation and detection.

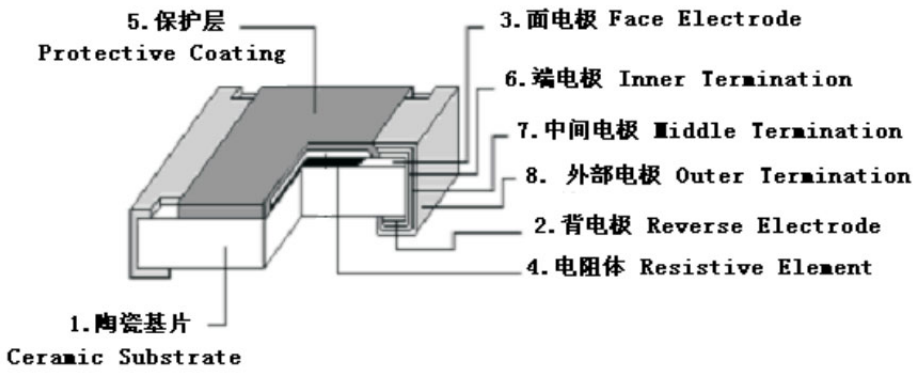

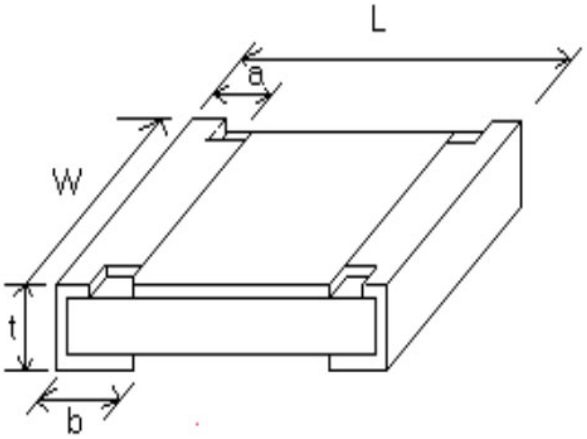

單位unit:mm

型號 TYPE	L	W	t	a	b
0402	1.00±0.10	0.50±0.10	0.30±0.10	0.20±0.10	0.25±0.10
0603	1.60±0.15	0.80±0.15	0.40±0.10	0.30±0.20	0.30±0.20
0805	2.00±0.20	1.25±0.15	0.50±0.10	0.30±0.20	0.40±0.20
1206	3.20±0.20	1.60±0.15	0.55±0.10	0.50±0.20	0.50±0.20

項目 Item	額定值 Rating Value
阻值範圍 Resistance Range	100Ω~2MΩ(25±0.1℃)
阻值誤差精度 Resistance Tolerance	F: ±1% H: ±3% J:±5% K:±10%
耗散系數(δ) Dissipation Coefficient	0402、0603: δ ≥1.0mW/℃ 其余規格: δ ≥1.5mW/℃
熱時間常數(τ) Thermal Time Constant	<2s
使用溫度範圍 Operating Temperature Range	-40℃ ~ +125℃
B值範圍 B Value Range	2700K ~ 4100K
B值誤差 B Value Tolerance	±3%

注：阻值低于100Ω的產品可以訂做。

SMD PPTC “Low Resistance”

Characteristic

1. provide products that meet RoHS and halogen free requirements.
2. standard EIA size: 0805, 1206, 1210, 1812
3. maintain current: 0.05 to 7.5A
4. small occupancy space
5. low resistance
6. fast action
7. working / storage temperature range: -40~+85 C
8. safety certification: UL / TUV

purpose

1. USB, HDMI, IEEE 1394 interface
2. personal computers, motherboards, notebook computers, tablet computers
3. mobile phones
4. digital camera
5. Telecommunications
6. consumer electronics

JK-SMD-0603

型号 Part number	最大工作电压 V_{max} (Vdc)	最大工作电流 I_{max} (A)	维持电流 I_{hold} @25°C (A)	动作电流 I_{trip} @25°C (A)	功率耗损 $P_{d\ typ}$ (W)	特定电流下动作时间 Time to trip Current (A)	Time (Sec)	阻值 R @25°C Ri_{min} (W)	$R1_{max}$ (W)
JK-SMD-0603-035L	6.0	50.0	0.35	0.70	0.5	8.0	0.1	0.15	1.0
JK-SMD-0603-050L	6.0	50.0	0.5	1.0	0.5	8.0	0.6	0.07	0.4
JK-SMD-0603-075L	6.0	50.0	0.75	1.5	0.5	8.0	1.0	0.055	0.25
JK-SMD-0603-100L	6.0	50.0	1.0	2.0	0.5	8.0	2.0	0.045	0.22
JK-SMD-0603-125L	6.0	50.0	1.25	2.5	0.5	8.0	3.0	0.035	0.18
JK-SMD-0603-150L	6.0	50.0	1.5	3.0	0.5	8.0	4.0	0.025	0.12
JK-SMD-0603-175L	6.0	50.0	1.75	3.5	0.5	8.0	5.0	0.015	0.07
JK-SMD-0603-200L	6.0	50.0	2.0	4.0	0.5	8.0	5.0	0.012	0.065
JK-SMD-0603-260L	6.0	50.0	2.6	5.2	0.5	8.0	5.0	0.008	0.055
JK-SMD-0603-300L	6.0	50.0	3.0	6.0	0.5	8.0	5.0	0.008	0.05

JK-SMD0805

型号 Part number	最大工作电压 V_{max} (Vdc)	最大工作电流 I_{max} (A)	维持电流 I_{hold} @25°C (A)	动作电流 I_{trip} @25°C (A)	功率耗损 $P_{d\ typ}$ (W)	特定电流下动作时间 Time to trip		阻值 R @25°C	
						Current	Time	Ri_{min}	$R1_{max}$
						(A)	(Sec)	(W)	(W)
JK-SMD0805-075L	6.0	50.0	0.75	1.5	0.7	8.0	1.0	0.020	0.160
JK-SMD0805-075L/12	12.0	50.0	0.75	1.5	0.7	8.0	1.0	0.020	0.160
JK-SMD0805-110L	6.0	50.0	1.1	2.2	0.7	8.0	1.0	0.018	0.110
JK-SMD0805-110L/12	12.0	50.0	1.1	2.2	0.7	8.0	1.0	0.018	0.110
JK-SMD0805-125L	6.0	50.0	1.25	2.5	0.7	8.0	1.0	0.016	0.100
JK-SMD0805-125L/12	12.0	50.0	1.25	2.5	0.7	8.0	1.0	0.016	0.100
JK-SMD0805-150L	6.0	50.0	1.5	3.0	0.7	8.0	1.0	0.008	0.065
JK-SMD0805-150L/12	12.0	50.0	1.5	3.0	0.7	8.0	1.0	0.008	0.065
JK-SMD0805-175L	6.0	50.0	1.75	3.5	0.7	8.75	2.0	0.008	0.060
JK-SMD0805-175L/12	12.0	50.0	1.75	3.5	0.7	8.75	2.0	0.008	0.060
JK-SMD0805-200L	6.0	50.0	2.0	4.0	0.7	10.0	2.0	0.006	0.055
JK-SMD0805-200L/12	12.0	50.0	2.0	4.0	0.7	10.0	2.0	0.006	0.055
JK-SMD0805-260L	6.0	50.0	2.6	5.2	0.7	13.0	2.0	0.003	0.035
JK-SMD0805-260L/12	12.0	50.0	2.6	5.2	0.7	13.0	2.0	0.003	0.035
JK-SMD0805-300L	6.0	50.0	3.0	6.0	0.8	15.0	2.0	0.003	0.030
JK-SMD0805-300L/12	12.0	50.0	3.0	6.0	0.8	15.0	2.0	0.003	0.030
JK-SMD0805-350L	6.0	50.0	3.5	7.0	0.8	17.5	2.0	0.003	0.020
JK-SMD0805-350L/12	12.0	50.0	3.5	7.0	0.8	17.5	2.0	0.003	0.020
JK-SMD0805-400L	6.0	50.0	4.0	8.0	0.8	20.0	2.0	0.003	0.015
JK-SMD0805-400L/12	12.0	50.0	4.0	8.0	0.8	20.0	2.0	0.003	0.015
JK-SMD0805-450L	6.0	50.0	4.5	9.0	0.8	22.5	2.0	0.003	0.010
JK-SMD0805-450L/12	12.0	50.0	4.5	9.0	0.8	22.5	2.0	0.003	0.010

JK-nSMD

型号 Part number	最大工作电压 V_{max} (Vdc)	最大工作电流 I_{max} (A)	维持电流 I_{hold} @25°C (A)	动作电流 I_{trip} @25°C (A)	功率耗损 $P_{d\ typ}$ (W)	特定电流下动作时间 Time to trip		阻值 R @25°C	
						Current	Time	Ri_{min}	$R1_{max}$
						(A)	(Sec)	(W)	(W)
JK-nSMD150L	6.0	50.0	1.5	3.0	0.8	8.0	5.0	0.01	0.065
JK-nSMD150L-9	9.0	50.0	1.5	3.0	0.8	8.0	5.0	0.01	0.065
JK-nSMD175L	6.0	50.0	1.75	3.5	0.8	8.0	5.0	0.01	0.06
JK-nSMD175L-9	9.0	50.0	1.75	3.5	0.8	8.0	5.0	0.01	0.06
JK-nSMD175L-12	12.0	50.0	1.75	3.5	0.8	8.0	5.0	0.01	0.06
JK-nSMD200L	6.0	50.0	2.0	4.0	0.8	8.0	5.0	0.008	0.04
JK-nSMD200L-12	12.0	50.0	2.0	4.0	0.8	8.0	5.0	0.008	0.04
JK-nSMD260L	6.0	50.0	2.6	5.2	0.8	8.0	5.0	0.004	0.026

JK-nSMD260L-12	12.0	50.0	2.6	5.2	0.8	8.0	5.0	0.004	0.026
JK-nSMD300L	6.0	50.0	3.0	6.0	0.8	15.0	2.0	0.004	0.02
JK-nSMD300L-12	12.0	50.0	3.0	6.0	0.8	15.0	2.0	0.004	0.02
JK-nSMD350L	6.0	50.0	3.5	7.0	1.0	17.5	2.0	0.004	0.018
JK-nSMD350L-12	12.0	50.0	3.5	7.0	1.0	17.5	2.0	0.004	0.018
JK-nSMD380L	6.0	50.0	3.8	7.6	1.0	19.0	2.0	0.004	0.016
JK-nSMD380L-12	12.0	50.0	3.8	7.6	1.0	19.0	2.0	0.004	0.016
JK-nSMD400L	6.0	50.0	4.0	8.0	1.0	20.0	2.0	0.004	0.014
JK-nSMD400L-12	12.0	50.0	4.0	8.0	1.0	20.0	2.0	0.004	0.014
JK-nSMD450L	6.0	50.0	4.5	9.0	1.0	22.5	2.0	0.002	0.012
JK-nSMD450L-12	12.0	50.0	4.5	9.0	1.0	22.5	2.0	0.002	0.012
JK-nSMD500L	6.0	50.0	5.0	10.0	1.0	25.0	2.0	0.002	0.011
JK-nSMD550L	6.0	50.0	5.5	11.0	1.0	27.5	2.0	0.002	0.010
JK-nSMD600L	6.0	50.0	6.0	12.0	1.2	30.0	2.0	0.002	0.009

JK-SMD1210

型号 Part number	最大工作电压 V_{max} (Vdc)	最大工作电流 I_{max} (A)	维持电流 I_{hold} @25°C (A)	动作电流 I_{trip} @25°C (A)	功率耗损 $P_{d\ typ}$ (W)	特定电流下动作时间 Time to trip		阻值 R @25°C	
						Current (A)	Time (Sec)	Ri_{min} (W)	$R1_{max}$ (W)
JK-SMD1210-150L	6.0	50.0	1.5	3.0	0.8	8.0	2.0	0.010	0.060
JK-SMD1210-150L-12	12.0	50.0	1.5	3.0	0.8	8.0	2.0	0.010	0.060
JK-SMD1210-175L	6.0	50.0	1.75	3.5	0.8	8.0	2.0	0.005	0.040
JK-SMD1210-175L-12	12.0	50.0	1.75	3.5	0.8	8.0	2.0	0.005	0.040
JK-SMD1210-190L	6.0	50.0	1.9	3.8	0.8	8.0	3.0	0.006	0.037
JK-SMD1210-190L-12	12.0	50.0	1.9	3.8	0.8	8.0	3.0	0.006	0.037
JK-SMD1210-200L	6.0	50.0	2.0	4.0	0.8	8.0	3.0	0.006	0.035
JK-SMD1210-200L-12	12.0	50.0	2.0	4.0	0.8	8.0	3.0	0.006	0.035
JK-SMD1210-260L	6.0	50.0	2.6	5.2	0.8	13.0	2.0	0.003	0.025
JK-SMD1210-260L-12	12.0	50.0	2.6	5.2	0.8	13.0	2.0	0.003	0.025
JK-SMD1210-300L	6.0	50.0	3.0	6.0	0.8	15.0	2.0	0.003	0.02
JK-SMD1210-300L-12	12.0	50.0	3.0	6.0	0.8	15.0	2.0	0.003	0.02
JK-SMD1210-350L	6.0	50.0	3.5	7.0	0.8	17.5	2.0	0.002	0.018
JK-SMD1210-350L-12	12.0	50.0	3.5	7.0	0.8	17.5	2.0	0.002	0.018
JK-SMD1210-380L	6.0	50.0	3.8	7.6	0.8	19.0	2.0	0.002	0.016
JK-SMD1210-380L-12	12.0	50.0	3.8	7.6	0.8	19.0	2.0	0.002	0.016
JK-SMD1210-400L	6.0	50.0	4.0	8.0	0.8	20.0	2.0	0.002	0.014
JK-SMD1210-400L-12	12.0	50.0	4.0	8.0	0.8	20.0	2.0	0.002	0.014
JK-SMD1210-450L	6.0	50.0	4.5	9.0	1.0	22.5	2.0	0.001	0.013
JK-SMD1210-450L-12	12.0	50.0	4.5	9.0	1.0	22.5	2.0	0.001	0.013

JK-SMD1210-500L	6.0	50.0	5.0	10.0	1.0	25.0	2.0	0.001	0.012
JK-SMD1210-500L-12	12.0	50.0	5.0	10.0	1.0	25.0	2.0	0.001	0.012
JK-SMD1210-550L	6.0	50.0	5.5	11.0	1.0	27.5	2.0	0.001	0.011
JK-SMD1210-550L-12	12.0	50.0	5.5	11.0	1.0	27.5	2.0	0.001	0.011
JK-SMD1210-600L	6.0	50.0	6.0	12.0	1.0	30.0	2.0	0.001	0.010
JK-SMD1210-600L-12	12.0	50.0	6.0	12.0	1.0	30.0	2.0	0.001	0.010
JK-SMD1210-650L	6.0	50.0	6.5	13.0	1.0	32.5	2.0	0.001	0.009
JK-SMD1210-650L-12	12.0	50.0	6.5	13.0	1.0	32.5	2.0	0.001	0.009
JK-SMD1210-700L	6.0	50.0	7.0	14.0	1.0	35.0	2.0	0.001	0.008
JK-SMD1210-700L-12	12.0	50.0	7.0	14.0	1.0	35.0	2.0	0.001	0.008
JK-SMD1210-750L	6.0	50.0	7.5	15.0	1.0	37.5	2.0	0.001	0.007
JK-SMD1210-750L-12	12.0	50.0	7.5	15.0	1.0	37.5	2.0	0.001	0.007

JK-mSMD

型号 Part number	最大工作电压 V_{max} (Vdc)	最大工作电流 I_{max} (A)	维持电流 I_{hold} @25°C (A)	动作电流 I_{trip} @25°C (A)	功率耗损 $P_{d\ typ}$ (W)	特定电流下动作时间 Time to trip		阻值 R @25°C	
						Current (A)	Time (Sec)	Ri_{min} (W)	$R1_{max}$ (W)
JK-mSMD190L	6.0	50.0	1.9	3.8	1.5	8.0	5.0	0.003	0.025
JK-mSMD190L-12	12.0	50.0	1.9	3.8	1.5	8.0	5.0	0.003	0.025
JK-mSMD260L	6.0	50.0	2.6	5.2	1.5	8.0	5.0	0.003	0.024
JK-mSMD260L-12	12.0	50.0	2.6	5.2	1.5	8.0	5.0	0.003	0.024
JK-mSMD300L	6.0	50.0	3.0	6.0	1.5	15.0	2.0	0.003	0.022
JK-mSMD300L-12	12.0	50.0	3.0	6.0	1.5	15.0	2.0	0.003	0.022
JK-mSMD350L	6.0	50.0	3.5	7.0	1.5	17.5	2.0	0.003	0.02
JK-mSMD350L-12	12.0	50.0	3.5	7.0	1.5	17.5	2.0	0.003	0.02
JK-mSMD400L	6.0	50.0	4.0	8.0	1.8	20.0	2.0	0.003	0.018
JK-mSMD400L-12	12.0	50.0	4.0	8.0	1.8	20.0	2.0	0.003	0.018
JK-mSMD450L	6.0	50.0	4.5	9.0	1.8	22.5	2.0	0.003	0.016
JK-mSMD450L-12	12.0	50.0	4.5	9.0	1.8	22.5	2.0	0.003	0.016
JK-mSMD500L	6.0	50.0	5.0	10.0	1.8	25.0	2.0	0.003	0.014
JK-mSMD500L-12	12.0	50.0	5.0	10.0	1.8	25.0	2.0	0.003	0.014
JK-mSMD550L	6.0	50.0	5.5	11.0	1.8	27.5	2.0	0.002	0.012
JK-mSMD550L-12	12.0	50.0	5.5	11.0	1.8	27.5	2.0	0.002	0.012
JK-mSMD600L	6.0	50.0	6.0	12.0	1.8	30.0	2.0	0.002	0.010
JK-mSMD600L-12	12.0	50.0	6.0	12.0	1.8	30.0	2.0	0.002	0.010
JK-mSMD650L	6.0	50.0	6.5	13.0	1.8	32.5	2.0	0.002	0.008
JK-mSMD650L-12	12.0	50.0	6.5	13.0	1.8	32.5	2.0	0.002	0.008
JK-mSMD700L	6.0	50.0	7.0	14.0	2.0	35.0	2.0	0.001	0.007

SMD PPTC

Characteristic

1. provide products that meet RoHS and halogen free requirements.
2. standard EIA size: 0805, 1206, 1210, 18122920
3. maintain current: 0.05 to 3A
4. small occupancy space
5. ultra low resistance
6. fast action
7. working / storage temperature range: -40~+85 C
8. safety certification: UL / TUV

purpose

1. USB, HDMI, IEEE 1394 interface
2. personal computers, motherboards, notebook computers, tablet computers
3. mobile phones
4. digital camera
5. Telecommunications
6. consumer electronics

JK-SMD0603

型号 Model	最大工作电压 V_{max}	最大工作电流 I_{max}	维持电流 I_{hold}	动作电流 I_{trip}	功率耗损 P_d	特定电流下动作时间 Maximum time to trip		阻值 Resistence	
	(Vdc)	(A)	(A)	(A)	Max. (W)	Current (A)	Time (Sec)	Ri_{min} (W)	$R1_{max}$ (W)
JK-SMD0603-005	24.0	20	0.05	0.15	0.50	0.2	1.00	3.0	35.00
JK-SMD0603-010	15.0	40	0.10	0.30	0.50	0.5	1.00	0.9	8.00
JK-SMD0603-020	9.0	40	0.20	0.40	0.50	1.00	0.60	0.55	3.50
JK-SMD0603-025	9.0	40	0.25	0.55	0.50	8.0	0.08	0.500	3.00
JK-SMD0603-030	6.0	40	0.30	0.70	0.50	8A	0.10	0.300	2.00
JK-SMD0603-035	6.0	40	0.35	0.75	0.50	8A	0.10	0.200	1.40

SMD0805

型号 Model	最大工作电压 V_{max}	最大工作电流 I_{max}	维持电流 I_{hold}	动作电流 I_{trip}	功率耗损 P_d	特定电流下动作时间 Maximum time to trip	阻值 Resistence

	(Vdc)	(A)	(A)	(A)	Max. (W)	Current (A)	Time (Sec)	Ri_{min} (W)	$R1_{max}$ (W)
SMD0805-005	15	100	0.05	0.15	0.5	0.5	2.00	2.00	50.0
SMD0805-010	15	100	0.10	0.30	0.5	0.5	1.50	1.00	6.00
SMD0805-020	9	100	0.20	0.50	0.5	8.0	0.02	0.50	3.50
SMD0805-035	6	100	0.35	0.75	0.5	8.0	0.10	0.25	1.20
SMD0805-050	6	100	0.50	1.00	0.6	8.0	0.10	0.15	0.85
SMD0805-075	6	100	0.75	1.50	0.6	8.0	0.20	0.09	0.385
SMD0805-100	6	100	1.00	1.95	0.6	8.0	0.30	0.06	0.23
SMD0805-110	6	100	1.10	2.20	0.6	8.0	0.30	0.06	0.21

JK-nSMD

型号 Model	最大工作电压 Vmax	最大工作电流 Imax	维持电流 Ihold	动作电流 Itrip	特定电流下动作时间 Time to trip		阻值 R25	
			@25°C	@25°C	Current	Time	Ri_{min}	$R1_{max}$
	(Vdc)	(A)	(A)	(A)	(A)	(Sec)	(W)	(W)
JK-nSMD005	60.0	100	0.05	0.15	0.25	1.50	3.600	50.000
JK-nSMD010	60.0	100	0.10	0.25	0.5	1.00	1.600	15.000
JK-nSMD010-33	33.0	100	0.10	0.25	0.5	1.00	1.600	15.000
JK-nSMD012	30	100	0.12	0.29	1.00	0.20	1.350	10.00
JK-nSMD016	30	100	0.16	0.37	1.00	0.30	1.000	4.50
JK-nSMD020	24.0	100	0.20	0.46	8.0	0.08	0.350	3.500
JK-nSMD025	16.0	100	0.25	0.50	8.0	0.08	0.350	2.500
JK-nSMD030	16.0	100	0.30	0.65	8.0	0.10	0.250	2.00
JK-nSMD035	16.0	100	0.35	0.75	8.0	0.10	0.250	1.300
JK-nSMD050	6.0	100	0.50	1.00	8.0	0.10	0.150	0.700
JK-nSMD050-13.2	13.2	100	0.50	1.00	8.0	0.10	0.150	0.700
JK-nSMD050-16	16	100	0.50	1.00	8.0	0.10	0.150	0.750
JK-nSMD050-24	24	100	0.50	1.00	8.0	0.10	0.150	0.750
JK-nSMD075	6.0	100	0.75	1.50	8.0	0.20	0.090	0.500
JK-nSMD075-13.2	13.2	100	0.75	1.50	8.0	0.20	0.090	0.500
JK-nSMD075-16	16	100	0.75	1.50	8.0	0.20	0.090	0.500
JK-nSMD100	6.0	100	1.00	1.80	8.0	0.30	0.055	0.270
JK-nSMD100-13.2	13.2	100	1.00	1.80	8.0	0.30	0.055	0.270
JK-nSMD100-16	16	100	1.00	1.80	8.0	0.30	0.055	0.330
JK-nSMD110	8.0	100	1.10	1.80	8.0	0.30	0.050	0.230
JK-nSMD150	6.0	100	1.50	3.00	8.0	1.00	0.040	0.130
JK-nSMD200	6.0	100	2.00	3.50	8.0	1.0	0.018	0.080

JK-SMD1210

型号 Model	最大工作电压 V_{max}	最大工作电流	维持电流	动作电流	功率耗损	特定电流下动作时间 Maximum time to trip	阻值 Resistence

		I_{max}	I_{hold}	I_{trip}	P_d				
	(Vdc)	(A)	(A)	(A)	Max. (W)	Current (A)	Time (Sec)	Ri_{min} (W)	$R1_{max}$ (W)
SMD1210-005	60	100	0.05	0.15	0.6	0.25	1.50	2.8	50
SMD1210-010	30	100	0.10	0.30	0.6	0.50	0.60	0.8	15
SMD1210-020	30	100	0.20	0.40	0.6	8.0	0.02	0.40	5
SMD1210-035-30V	30	100	0.35	0.75	0.6	8.0	0.20	0.20	1.3
SMD1210-035	16	100	0.35	0.75	0.6	8.0	0.20	0.20	1.3
SMD1210-050	16	100	0.50	1.00	0.6	8.0	0.10	0.18	0.9
SMD1210-075	6	100	0.75	1.50	0.6	8.0	0.10	0.07	0.4
SMD1210-110	6	100	1.10	2.20	0.6	8.0	0.30	0.05	0.21
SMD1210-110-12V	12	100	1.10	2.20	0.8	8.0	0.30	0.05	0.25
SMD1210-150	6	100	1.50	3.00	0.8	8.0	0.50	0.03	0.21
SMD1210-175	6	100	1.75	3.50	0.8	8.0	0.60	0.02	0.08
SMD1210-200	6	100	2.00	4.00	0.8	8.0	1.00	0.015	0.07

JK-mSMD

型号 Model	最大工作电压 Vmax (Vdc)	最大工作电流 Imax (A)	维持电流 Ihold @25°C (A)	动作电流 Itrip @25°C (A)	特定电流下动作时间 Time to trip		阻值 R25	
					Current (A)	Time (Sec)	Ri_{min} (W)	$R1_{max}$ (W)
JK-mSMD010	30.0	100	0.10	0.30	0.5	1.50	0.750	15.000
JK-mSMD010-60	60.0	100	0.10	0.30	0.5	1.50	0.750	15.000
JK-mSMD014-33	33.0	100	0.14	0.34	1.5	0.15	0.650	6.000
JK-mSMD014	60.0	100	0.14	0.34	1.5	0.15	0.650	6.000
JK-mSMD020	30.0	100	0.20	0.40	8.0	0.02	0.350	5.000
JK-mSMD030	30.0	100	0.30	0.60	8.0	0.10	0.250	3.000
JK-mSMD050	15.0	100	0.50	1.00	8.0	0.15	0.150	1.000
JK-mSMD050-24	24.0	100	0.50	1.00	8.0	0.15	0.150	1.000
JK-mSMD050-30	30.0	100	0.50	1.00	8.0	0.15	0.150	1.000
JK-mSMD075	13.2	100	0.75	1.50	8.0	0.20	0.090	0.450
JK-mSMD075-24	24	100	0.75	1.50	8.0	0.20	0.090	0.450
JK-mSMD075-33	33	100	0.75	1.50	8.0	0.20	0.090	0.450
JK-mSMD110	8.0	100	1.10	2.20	8.0	0.30	0.050	0.250
JK-mSMD110-16	16.0	100	1.10	2.20	8.0	0.30	0.050	0.250
JK-mSMD110-24	24.0	100	1.10	2.20	8.0	0.30	0.050	0.250
JK-mSMD110-33	33.0	100	1.10	2.20	8.0	0.30	0.050	0.250
JK-mSMD125-8	8.0	100	1.25	2.50	8.0	0.40	0.050	0.200
JK-mSMD125	16.0	100	1.25	2.50	8.0	0.40	0.050	0.200
JK-mSMD150	8.0	100	1.50	3.00	8.0	0.50	0.040	0.160
JK-mSMD150-16	16.0	100	1.50	3.00	8.0	0.50	0.040	0.160

型号 Model	最大工作电压 Vmax (Vdc)	最大工作电流 Imax (A)	维持电流 Ihold @25°C (A)	动作电流 Itrip @25°C (A)	特定电流下动作时间 Time to trip		阻值 R25	
					Current	Time	Ri_{min}	$R1_{max}$
					(A)	(Sec)	(W)	(W)
JK-mSMD150-24	24.0	100	1.50	3.00	8.0	0.50	0.040	0.160
JK-mSMD160	8.0	100	1.60	2.80	8.0	1.00	0.030	0.130
JK-mSMD200	8.0	100	2.00	4.00	8.0	2.00	0.020	0.100
JK-mSMD200-12	12.0	100	2.00	4.00	8.0	2.00	0.020	0.100
JK-mSMD200-16	16.0	100	2.00	4.00	8.0	2.00	0.020	0.100
JK-mSMD260	8.0	100	2.60	5.00	8.0	2.50	0.015	0.050
JK-mSMD260-12	12.0	100	2.60	5.00	8.0	2.50	0.015	0.060
JK-mSMD260-16	16.0	100	2.60	5.00	8.0	2.50	0.015	0.060
JK-mSMD300	8.0	100	3.00	5.00	8.0	4.00	0.012	0.040

JK-SMD2920

Model	V_{max}	I_{max}	I_{hold}	I_{trip}	P_d	Maximum time to trip		Resistence	
	(Vdc)	(A)	(A)	(A)	Max. (W)	Current	Time	Ri_{min}	$R1_{max}$
						(A)	(Sec)	(W)	(W)
SMD030L	60	100	0.30	0.60	1.5	1.5	3.0	0.60	4.80
SMD050L	60	100	0.50	1.00	1.5	2.5	4.0	0.18	1.40
SMD075L	33	100	0.75	1.50	1.5	8.0	0.3	0.10	1.00
SMD100L	33	100	1.00	2.20	1.5	8.0	0.5	0.065	0.41
SMD125L	33	100	1.25	2.50	1.5	8.0	2.0	0.05	0.25
SMD150L	33	100	1.50	3.00	1.5	8.0	2.0	0.035	0.23
SMD185L	33	100	1.85	3.70	1.5	8.0	2.5	0.030	0.15
SMD200L	16	100	2.00	4.00	1.5	8.0	4.5	0.020	0.12
SMD200L-24	24	100	2.00	4.00	1.5	8.0	4.5	0.020	0.12
SMD250L	16	100	2.50	5.00	1.5	8.0	16.0	0.020	0.085
SMD260L	16	100	2.60	5.20	1.5	8.0	10.0	0.014	0.075
SMD300L-6	6	100	3.00	6.00	1.5	8.0	20.0	0.012	0.048
SMD300L-16	16	100	3.00	6.00	1.5	8.0	20.0	0.012	0.050

SMD VARISTOR

Features: 1. Laminated ceramic structure. 2, no lead. 3, temperature range: - 55 to + 1. 4, the working voltage range is V w (DC) =3.3~ 615V. 5, bidirectional restriction characteristic, suitable for ESD protection. 6, the leakage current is very small. 7, small parasitic inductance and fast response time (less than 0.5ns response time). 8. Excellent temperature coefficient. 9, good welding performance (end electrode for three layers of electroplating). Application: 1. Prevent overvoltage: When the applied voltage rises to the voltage sensitive voltage, the current of the varistor rises sharply, and the surge voltage of the protected equipment decreases rapidly, so that the anti-surge noise ability of the equipment equipped with varistor meets the corresponding requirements.

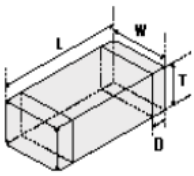

Equivalent circuit

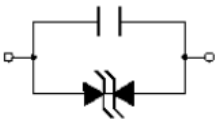

單位(Unit): mm/inch

Part Number	L	W	T	D
100505 (0402)	1.0±0.15 (0.040±0.006)	0.5±0.15 (0.020±0.006)	0.5±0.15 (0.020±0.006)	0.25±0.10 (0.010±0.004)
160808 (0603)	1.6±0.2 (0.063±0.008)	0.8±0.2 (0.031±0.008)	0.8±0.2 (0.031±0.008)	0.3±0.2 (0.01±0.008)
201209 (0805)	2.0±0.2 (0.079±0.008)	1.2±0.2 (0.047±0.008)	0.9±0.2 (0.035±0.008)	0.5±0.3 (0.020±0.012)
201212 (0805)	2.0±0.2 (0.079±0.008)	1.2±0.2 (0.047±0.008)	1.2±0.2 (0.047±0.008)	0.5±0.3 (0.020±0.012)
321611 (1206)	3.2±0.2 (0.126±0.008)	1.6±0.2 (0.063±0.008)	1.1±0.2 (0.043±0.008)	0.5±0.3 (0.020±0.012)
321609 (1206)	3.2±0.2 (0.126±0.008)	1.6±0.2 (0.063±0.008)	0.9±0.2 (0.035±0.008)	0.5±0.3 (0.020±0.012)
322513 (1210)	3.2±0.2 (0.126±0.008)	2.5±0.2 (0.098±0.008)	1.3±0.2 (0.051±0.008)	0.5±0.3 (0.020±0.012)
451616 (1806)	4.5±0.2 (0.186±0.008)	1.6±0.2 (0.063±0.008)	1.6±0.2 (0.063±0.008)	0.5±0.3 (0.020±0.012)
453215 (1812)	4.5±0.2 (0.180±0.008)	3.2±0.2 (0.126±0.008)	1.5±0.2 (0.060±0.008)	0.5±0.3 (0.020±0.012)
5750 (2220)	5.7±0.3 (0.22±0.012)	5.0±0.3 (0.20±0.012)	1.0~2.5 (0.050~0.100)	0.7±0.3 (0.028±0.012)
8063 (3225)	8.0±0.3 (0.32±0.012)	6.3±0.3 (0.250±0.012)	1.0~2.5 (0.050~0.100)	0.7±0.3 (0.028±0.012)
1080 (4032)	10.2±0.3 (0.400±0.012)	8.0±0.3 (0.320±0.012)	1.0~2.5 (0.050~0.100)	0.7±0.3 (0.028±0.012)

1005 (0402) TYPE

1005 PART Number	Working voltage		Varistor voltage @1mA DC		Maximum Clamping Voltage 8/20μs 1A	Energy Absorb 10/1000μs	Peak Current 8/20μs	Typical Capacitance @1MHz
	DC	AC						
	Volts	Volts	VB	ΔVB	Volts	Joules	Amps	pF
FPV100505G3R3□M□	3.3	2.5	5	±20%	14	0.05	20	300
FPV100505G5R6□L□	5.6	4	8	±15%	19	0.05	20	250
FPV100505G8R0□L□	8	5.7	12	±15%	27	0.05	20	230
FPV100505G9R0□L□	9	6.4	13	±15%	30	0.05	20	200
FPV100505G110□L□	11	7.8	16	±15%	33	0.05	20	180
FPV100505G120□L□	12	8.5	18	±15%	34	0.05	20	150
FPV100505G140□K□	14	10	20	±10%	35	0.05	20	120
FPV100505G160□K□	16	11.3	22	±10%	39	0.05	20	100
FPV100505G180□K□	18	12.7	25	±10%	44	0.05	20	90

1608 (0603) TYPE

1608 PART Number	Working voltage		Varistor voltage @1mA DC		Maximum Clamping Voltage 8/20μs 1A	Energy Absorb 10/1000μs	Peak Current 8/20μs	Typical Capacitance @1MHz
	DC	AC						
	Volts	Volts	VB	ΔVB	Volts	Joules	Amps	pF
FPV160808G3R3□M□	3.3	2.5	5	±20%	14	0.1	30	300
FPV160808G5R6□L□	5.6	4	8	±15%	19	0.1	30	280
FPV160808G8R0□L□	8	5.7	12	±15%	27	0.1	30	250
FPV160808G9R0□L□	9	6.4	13	±15%	30	0.1	30	240
FPV160808G110□L□	11	7.8	16	±15%	33	0.1	30	220
FPV160808G120□L□	12	8.5	18	±15%	34	0.1	30	210
FPV160808G140□K□	14	10	20	±10%	35	0.1	30	190
FPV160808G160□K□	16	11.3	22	±10%	39	0.1	30	180
FPV160808G180□K□	18	12.7	25	±10%	44	0.1	30	170
FPV160808G220□K□	22	15.6	30	±10%	53	0.1	30	150
FPV160808G240□K□	24	17	33	±10%	58	0.1	30	140
FPV160808G260□K□	26	18.4	36	±10%	63	0.1	30	120
FPV160808G300□K□	30	21.2	42	±10%	74	0.1	30	100

2012 (0805) TYPE

2012 PART Number	Working voltage		Varistor voltage @1mA DC		Maximum Clamping Voltage 8/20μs 1A	Energy Absorb 10/1000μs	Peak Current 8/20μs	Typical Capacitance @1MHz
	DC	AC						
	Volts	Volts	VB	ΔVB	Volts	Joules	Amps	pF
FPV2012□G3R3□M□	3.3	2.5	5	±20%	14	0.1	40	350
FPV2012□G5R6□L□	5.6	4	8	±15%	19	0.1	40	300
FPV2012□G8R0□L□	8	5.7	12	±15%	27	0.1	40	270
FPV2012□G9R0□L□	9	6.4	13	±15%	30	0.1	40	260
FPV2012□G110□L□	11	7.8	16	±15%	33	0.1	35	240
FPV2012□G120□L□	12	8.5	18	±15%	34	0.1	35	220
FPV2012□G140□K□	14	10	20	±10%	35	0.1	35	200
FPV2012□G160□K□	16	11.3	22	±10%	39	0.1	35	190
FPV2012□G180□K□	18	12.7	25	±10%	44	0.1	35	180
FPV2012□G220□K□	22	15.6	30	±10%	53	0.1	35	160
FPV2012□G240□K□	24	17	33	±10%	58	0.1	35	150
FPV2012□G260□K□	26	18.4	36	±10%	63	0.1	35	140
FPV2012□G300□K□	30	21.2	42	±10%	74	0.1	35	110

3216(2016) TYPE

3216 PART Number	Working voltage		Varistor voltage @1mA DC		Maximum Clamping Voltage 8/20μs 1A	Energy Absorb 10/1000μs	Peak Current 8/20μs	Typical Capacitance @1MHz
	DC	AC						
	Volts	Volts	VB	ΔVB	Volts	Joules	Amps	pF
FPV3216□G3R3□M□	3.3	2.5	5	±20%	14	0.1	40	600
FPV3216□G5R6□L□	5.6	4	8	±15%	19	0.1	40	560
FPV3216□G8R0□L□	8	5.7	12	±15%	27	0.1	40	500
FPV3216□G9R0□L□	9	6.4	13	±15%	30	0.1	40	450
FPV3216□G110□L□	11	7.8	16	±15%	33	0.1	35	400
FPV3216□G120□L□	12	8.5	18	±15%	34	0.1	35	300
FPV3216□G140□K□	14	10	20	±10%	35	0.1	35	270
FPV3216□G160□K□	16	11.3	22	±10%	39	0.1	35	250
FPV3216□G180□K□	18	12.7	25	±10%	44	0.1	35	240
FPV3216□G220□K□	22	15.6	30	±10%	53	0.1	35	220
FPV3216□G240□K□	24	17	33	±10%	58	0.1	35	210
FPV3216□G260□K□	26	18.4	36	±10%	63	0.1	35	200
FPV3216□G300□K□	30	21.2	42	±10%	74	0.1	35	180
FPV3216□G330□K□	33	23.3	45	±10%	79	0.1	35	150
FPV3216□G380□K□	38	27	51	±10%	90	0.1	35	130
FPV3216□G420□K□	42	30	56	±10%	99	0.1	35	110
FPV3216□G480□K□	48	34	62	±10%	110	0.1	35	90
FPV3216□G560□K□	56	40	72	±10%	127	0.1	35	80
FPV3216□G600□K□	60	45	76	±10%	134	0.1	35	70
FPV3216□G680□K□	68	48	86	±10%	151	0.1	35	60

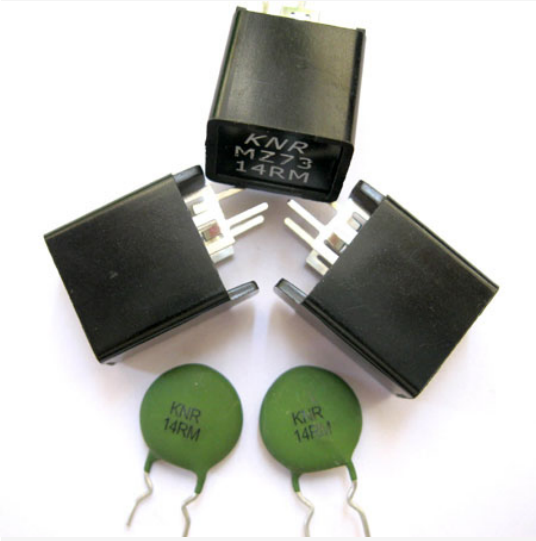

MZ7-type degaussing thermistor

Description: Color TV and color monitors automatically degaussing components; Communicate the current limiting circuit components; This product has superior impact resistance current capacity, high pressure, residual flow, long life, reliability can be high.

◆Part Name

MZ7-type degaussing thermistor

◆Features

Color TV and color monitors automatically degaussing components;

Communicate the current limiting circuit components;

This product has superior impact resistance current capacity, high pressure, residual flow, long life, reliability can be high.

◆Applications

When color TV and Color boot, PTC thermistor in the low resistance state, degaussing coil to form high-current, magnetic line of force is greater than 350At, can effectively eliminate the effects of stray magnetic fields. PTC thermistor then at large under the influence of current into the high impedance state, loop current automatic attenuation, the residual current is very small, similar to open-circuit, magnetic 0.03At following line to achieve under normal operation within acceptable limits. Automatic degaussing PTC thermistor and should therefore have a larger impact on current and very low residual current, has better impact resistance and high voltage strength. At present, automatic degaussing PTC thermistor for the development trend of small size, low resistance, low residual current and high impact resistance, high reliability. Use conditions: ambient temperature -10 ℃ - +85 ℃, relative humidity 93 ± 2%.

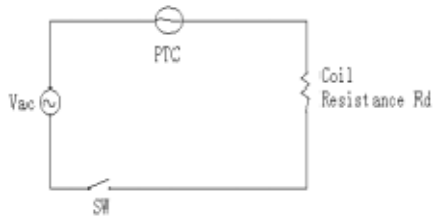

Fig 1

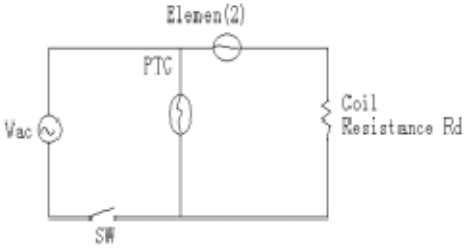

Fig 2

◆Dimensions

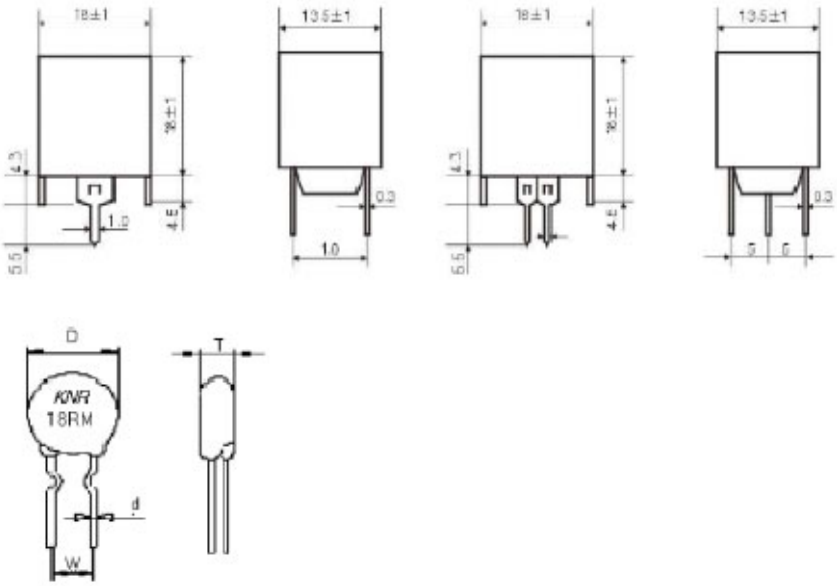

规格	D_{MAX} （mm）	W ±1 （mm）	T_{MAX} （mm）	Φd±0.05 （mm）
KNR-18RM	15.0	9.0	6.0	0.8

◆Product Coding/ How to Order

KNR – MZ 72 – 14R M AC 270V

① ② ③ ④ ⑤ ⑥ ⑦

①Company trademarks

②Thermistor

③71-- Leading Ttype 72-- Segmental shell Type(Single-element / 2Pin) 73-- Segmental shell Type(Double-element / 3Pin)

④Resistance value at 25℃

⑤Resistance tolerance M-±20%，N-±30%

⑥AC

⑦Maximum voltage

◆Technical Parameters

Part Number	Resistance at 25℃ (Ω)	Rated voltage (V)	Maximum working voltage (V)	Withstanding Voltage (V)	Impulse Current (A)	Residual current (mA)		
					I0(P-P)	I10(rms)	I30(rms)	I60(rms)
KNR-MZ71	14±20%	220	270	360	≥20	≤20	≤10	≤6
	18±20%	220	270	420	≥15	≤15	≤8	≤6
kNR-MZ72	7±20%	220	270	360	≥25	---	---	≤8
	9±20%	220	270	360	≥25	≤22	≤12	≤7
	12±20%	220	270	360	≥20	≤20	≤10	≤6
	14±20%	220	270	360	≥20	≤20	≤10	≤6
	18±20%	220	270	420	≥15	≤15	≤8	≤6
	27±20%	220	270	420	≥15	≤15	≤8	≤5
KNR-MZ73	7±20%	220	270	360	≥25	---	---	≤1.5
	9±20%	220	270	360	≥25	≤14	≤4	≤1.5
	12±20%	220	270	360	≥20	≤10	≤3.5	≤1.0
	14±20%	220	270	360	≥20	≤8	≤2.5	≤1.0
	18±20%	220	270	420	≥15	≤8	≤2.5	≤1.0
	27±20%	220	270	420	≥15	≤6	≤3	≤1.0

☆ Designed according to customers request special customized specifications Product。

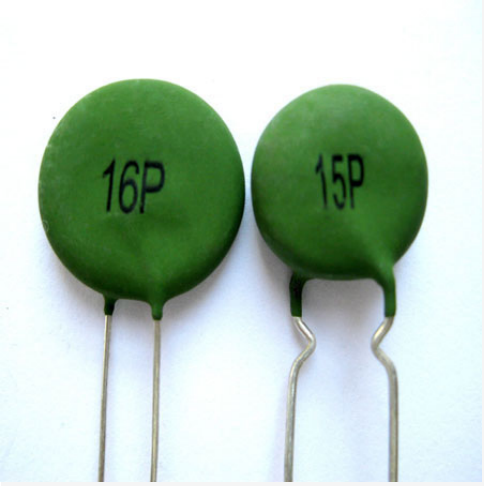

MZ21-type PTC Thermistor

Description: Mainly used in line (transformer, micro-motor, charger, instrumentation, home appliances, communications circuit) over the over-current protection.

◆Part Name

MZ21-type PTC Thermistor

◆Features

Non-contact circuit and components to protect
Automatically limit the flow
Troubleshooting automatically restore
Job without the noise-free spark
Reliable and easy to use, long life

◆Applications

Mainly used in line (transformer, micro-motor, charger, instrumentation, home appliances, communications circuit) over the over-current protection.

MZ21- type PTC thermistor is connected in series in the load circuit, the circuit when abnormal, can automatically restrict or block current flow, when troubleshooting and then restore the original state. Specific action: When the circuit is in normal state, the flow through the PTCR current of less than rated current, PTCR in a normal, resistance is very small, will not affect the protected components / circuits work correctly. When the circuit current at much higher than the rated current, PTCR sudden fever, increase resistance to high resistance state, thus limiting or blocking current, protection circuits are not damaged. Current returned to normal, PTCR also automatically restore to the low resistance state, the circuit to resume normal work.

◆**Dimensions**

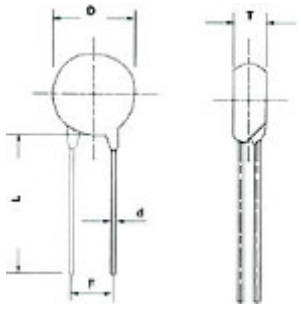

◆**Product Coding/ How to Order**

KNR	MZ	21	A	03	P	221R	M	800	B
①	②	③	④	⑤	⑥	⑦	⑧	⑨	⑩

①KNR

② PTC Thermistor

③ Part N0：

2-- Over-Current Protection Series：

21—Coating Type；22—Disk Type；23—Plastics Type

3-- start-up delay Series：

31--conventional type；32—Complex Intelligent Type

7-- degaussing in CRT of Color TV / Monitor Series：

71—Leading Type；

72-- segmental shell Type(Single-element / 2Pin)；

73-- segmental shell Type(Double-element / 3Pin)

④Share of Leads：S--Straight；A—Axis Formed；N—In-Forming；W---Out-forming

⑤Disk Diameter：03--3mm；04--4mm；12--12mm

⑥Curie Temperture：

L--50℃；V--60℃ ；M--75℃&80℃；K--90℃；N--100℃ Q--110℃；P--120℃；X--130℃；R--140℃；S--150℃

⑦Resistance of Zero-Rated Power：

221-- 220Ω；472--4700Ω；R5--0.5Ω；4R7--4.7Ω；9R0--9.0Ω；180--18Ω

⑧Tolerance of Rated Resistance：

J--±5% ；K-- ±10%；L --±15% ；M--±20%；V--±25%；N--±30%

⑨Withstanding Voltage：

800—800Vac；600—600Vac；270—270Vac

⑩Packing Type：B--Bulk；C—compilation

◆Technical Parameters

Part Number	Non-Operating Current(mA)		Operating Current (mA)	Max.W.C. Imax (mA)	Rated Resistance ±25%Ω	Max. Voltage (Vac)	Dimensions (mm)			
	25℃	60℃					D_{max}	F	Φd	T_{max}
MZ21A10R1R2RV15	850	700	1550	4300	1.2	15	12.5	5.0	0.6	5.0
MZ21A08R1R8RV15	600	500	1100	3000	1.8	15	9.0	5.0	0.6	5.0
MZ21A07R1R2RV15	650	550	1200	2500	1.2	15	8.5	5.0	0.6	5.0
MZ21A05R4R6RV15	350	300	680	1000	4.6	15	6.5	5.0	0.6	5.0
MZ21A03R13RV15	180	150	350	700	13	15	4.5	5.0	0.5	5.0
MZ21A10P1R2RV18	700	600	1400	4300	1.2	18	12.5	5.0	0.6	5.0
MZ21A08P1R8RV18	650	550	1200	3000	1.8	18	9.0	5.0	0.6	5.0
MZ21A05P4R6RV18	300	250	580	1000	4.6	18	6.5	5.0	0.6	5.0
MZ21A03P13RV18	145	120	280	700	13	18	4.5	5.0	0.5	5.0
MZ21A10R1R8RV30	650	550	1300	4300	1.8	30	12.5	5.0	0.6	5.0
MZ21A08R1R2RV30	600	500	1100	3000	1.8	30	9.0	5.0	0.6	5.0
MZ21N12P1R2RV30	750	600	1500	5500	1.2	30	13.5	5.0	0.6	5.0
MZ21N12P1R8RV30	500	430	1000	5500	1.8	30	13.5	5.0	0.6	5.0
MZ21N10P2R7RV30	380	320	700	4300	2.7	30	12.5	5.0	0.6	5.0
MZ21N08P1R8RV30	550	450	1000	3000	1.8	30	9.0	5.0	0.6	5.0
MZ21N05P10RV30	170	140	340	1000	10	30	4.5	5.0	0.6	5.0
MZ21N16P2R3RV60	550	450	1100	8000	2.3	60	18.0	5.0	0.6	5.0
MZ21N12P3R7RV60	380	320	750	5500	3.7	60	13.5	5.0	0.6	5.0
MZ21N10P5R6RV60	300	250	600	4300	5.6	60	12.5	5.0	0.6	5.0
MZ21N08P9R4RV60	180	150	360	3000	9.4	60	9.0	5.0	0.6	5.0
MZ21N05P25RV60	100	85	200	1000	25	60	6.5	5.0	0.6	5.0
MZ21N03P2R3RV60	60	50	120	700	55	60	4.5	5.0	0.5	5.0
MZ21W20P2R6RV140	650	500	1300	4300	2.6	140	22.0	5.0	0.6	5.0
MZ21W16P4R7RV140	425	330	1850	3100	4.7	140	18.0	5.0	0.6	5.0
MZ21W13P6R8RV140	325	250	650	1800	6.8	140	14.5	5.0	0.6	5.0
MZ21W12P6R8RV140	300	230	600	1800	6.8	140	13.5	5.0	0.6	5.0
MZ21W10P6R8RV140	275	200	550	1200	6.8	140	12.5	5.0	0.6	5.0
MZ21W08P22RV140	135	110	270	800	22	140	9.0	5.0	0.6	5.0
MZ21W06P25RV140	125	90	250	500	25	140	7.5	5.0	0.6	5.0
MZ21W05P33RV140	90	70	175	140	33	140	6.5	5.0	0.6	5.0

MZ21W16R2R1RV140	710	570	1420	3100	2.1	140	18.0	5.0	0.6	5.0
MZ21W13R3R8RV140	500	400	1000	1800	3.8	140	14.5	5.0	0.6	5.0
MZ21W10R6R7RV140	300	230	600	1200	6.7	140	12.5	5.0	0.6	5.0
MZ21W08R12RV140	200	160	400	600	12	140	9.0	5.0	0.6	5.0
MZ21S20P3R7RV265	530	430	1050	5000	3.7	265	22.0	5.0	0.6	5.0
MZ21S18P4R7RV265	390	300	900	5000	4.7	265	19.5	5.0	0.6	5.0
MZ21S16P5R6RV265	340	280	780	4100	5.6	265	18.5	5.0	0.6	5.0
MZ21S14P6R8RV265	290	220	670	3000	6.8	265	15.0	5.0	0.6	5.0
MZ21S12P100RV265	200	180	510	2200	10	265	14.0	5.0	0.6	5.0
MZ21S10P150RV265	170	140	400	1500	15	265	12.5	5.0	0.6	5.0
MZ21S09P220RV265	140	100	330	1000	22	265	10.5	5.0	0.6	5.0
MZ21S07P330RV265	100	85	230	1000	33	265	9.0	5.0	0.6	5.0
MZ21S07P560RV420	80	70	190	800	56	265	8.5	5.0	0.6	5.0
MZ21S07P620RV360	75	65	180	800	62	360	8.5	5.0	0.6	5.0
MZ21S07P820RV420	60	55	150	800	82	420	8.5	5.0	0.6	5.0
MZ21S07P121RV500	35	30	85	300	120	500	8.5	5.0	0.6	5.0
MZ21S07P151RV600	30	25	70	300	180	600	8.5	5.0	0.6	5.0
MZ21S05P500RV265	60	55	130	300	50	265	6.5	5.0	0.5	5.0
MZ21S05P700RV265	50	45	110	300	70	265	6.5	5.0	0.5	5.0
MZ21S05P121RV265	35	25	90	300	120	265	6.5	5.0	0.5	5.0
MZ21S05P151RV265	30	20	70	300	150	265	6.5	5.0	0.5	5.0
MZ21S05P651RV450	20	18	50	300	650	450	6.5	5.0	0.5	5.0
MZ21S05P102RV450	15	12	40	300	1000	450	6.5	5.0	0.5	5.0
MZ21S03P151RV265	30	22	75	300	150	265	6.5	5.0	0.5	5.0
MZ21S10N120RV265	170	130	340	1200	12	265	11.0	5.0	0.6	5.0
MZ21S10N220RV265	125	90	250	1200	22	265	11.0	5.0	0.6	5.0
MZ21S07N220RV265	120	90	220	500	22	265	8.0	5.0	0.6	5.0
MZ21S08M120RV265	120	70	220	800	12	265	9.0	5.0	0.6	5.0
MZ21S08M180RV265	100	60	200	800	18	265	9.0	5.0	0.6	5.0
MZ21S08M250RV265	85	50	170	800	25	265	9.0	5.0	0.6	5.0
MZ21S08M500RV265	60	40	120	800	50	265	9.0	5.0	0.6	5.0
MZ21S07M101RV265	50	30	100	600	100	265	8.0	5.0	0.6	5.0
MZ21S05M700RV265	50	30	100	300	70	265	6.5	5.0	0.6	5.0
MZ21S05M121RV265	30	20	60	300	120	265	6.5	5.0	0.6	5.0
MZ21S03M101RV265	25	18	55	200	100	265	4.5	5.0	0.5	5.0
MZ21S03M151RV265	22	15	45	200	150	265	4.5	5.0	0.5	5.0
MZ21S10Q102RV1000	25	17	500	3000	7500	1000	12.5	5.0	0.6	5.0

☆Designed according to customers request special customized specifications Product.

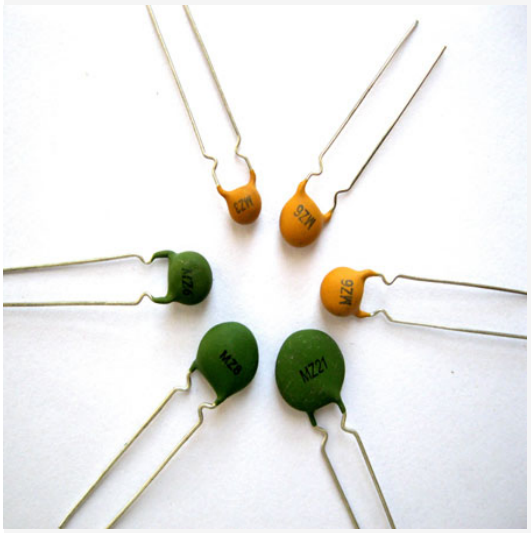

MZ31PTC Thermistor

Description: MZ31PTC thermistor for a variety of fluorescent lamp ballasts, electronic energy-saving lamps, the do not have to change lines, will be directly PTCR jumper tubes at both ends of the resonant capacitor, can be turned into electronic ballasts, energy-saving lamp starter hardware for pre - hot start, extended lamp life.

◆Part Name:

MZ31PTC Thermistor

（General-type delayed start)

◆Features:

Small size
High voltage (800 ~ 1000VAC more)
Long life (more than 10,000 power switch)
Power of small

◆Applications:

MZ31PTC thermistor for a variety of fluorescent lamp ballasts, electronic energy-saving lamps, the do not have to change lines, will be directly PTCR jumper tubes at both ends of the resonant capacitor, can be turned into electronic ballasts, energy-saving lamp starter hardware for pre - hot start, extended lamp life. Icons such as job circuit: connect the switch, R status in the ambient temperature, its resistance value much lower than the C2 value, current through C1, R form a loop so that filament preheating, after 0.4-2 second after, R self-heating temperature High Curie temperature reaches more than status, and its resistance is much larger than C2 resistor value, current through C1, C2 form a LC resonant circuit lead, resulting in high-pressure lamp lit.

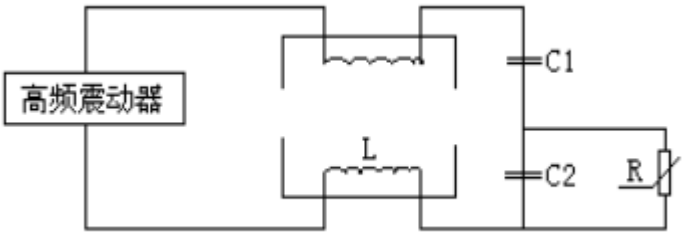

◆**Dimensions:**

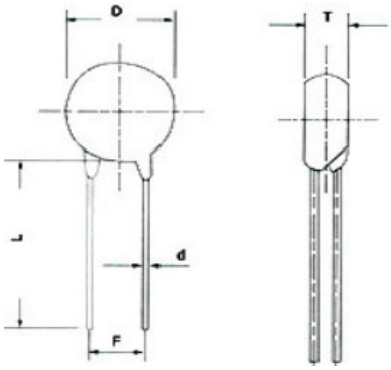

◆**Product Coding/ How to Order:**

KNR	MZ	21	A	03	P	221R	M	800	B
①	②	③	④	⑤	⑥	⑦	⑧	⑨	⑩

① KNR

② PTC Thermistor

③ Part N0：

2-- Over-Current Protection Series：

21—Coating Type；22—Disk Type；23—Plastics Type

3-- start-up delay Series：

31--conventional type；32—Complex Intelligent Type

7-- degaussing in CRT of Color TV / Monitor Series：

71—Leading Type；

72--segmental shell Type(Single-element / 2Pin)；

73--segmental shell Type(Double-element / 3Pin)

④Share of Leads：S--Straight；A--Axis Formed；N--In-Forming

⑤Disk Diameter：03--3mm；04--4mm；12--12mm

⑥Curie Temperture：

L--50℃；V--60℃ ；M--75℃&80℃；K--90℃；N--100℃ Q--110℃；P--120℃；X--130℃；R--140℃；S--150℃

⑦Resistance of Zero-Rated Power：

221-- 220Ω；472--4700Ω；R5--0.5Ω；4R7--4.7Ω；9R0--9.0Ω；180--18Ω

⑧Tolerance of Rated Resistance：

J--±5% ；K-- ±10%；L --±15% ；M--±20%；V--±25%；N--±30%

⑨Withstanding Voltage：

800--800Vac；600--600Vac；270--270Vac

⑩Packing Type：B--Bulk；C—compilation

◆**Technical Parameters:**

N0	Part No	Rated zero Power resistance Rn(Ω)	Withstanding Voltage	Max. W.C I_{max} (mA)	Switching temperature (℃)	Dimensions (mm)		
						D_{max}	T_{max}	d
1	MZ 31S04L68RN360B	68±30%	360	200	50±7	4.5	5.5	0.5
2	MZ 31S04L101N400B	100±30%	400					
3	MZ 31S04L151N400B	150±30%	400					
4	MZ 31S04L221N500B	220±30%	500					
5	MZ 31S04L331N600B	330±30%	600					
6	MZ 31S04L471N600B	470±30%	600					
7	MZ 31S04L681N600B	680±30%	600					
8	MZ 31S04L102N600B	1000±30%	600					
9	MZ 31S04L152N600B	1500±30%	600					
10	MZ 31S04L222N600B	2200±30%	600	100				
11	MZ 31S04L332N600B	3200±30%	600	70				
12	MZ 31S04L472N600B	4700±30%	600	50				
13	MZ 31S04M68RN360B	68±30%	360	200	75±7			
14	MZ 31S04 M101N400B	100±30%	400					
15	MZ 31S04M151N400B	150±30%	400					
16	MZ 31S04M221N500B	220±30%	500					
17	MZ 31S04M331N600B	330±30%	500					
18	MZ 31S04M471N600B	470±30%	600					
19	MZ 31S04M681N600B	680±30%	600					
20	MZ 31S04M102N600B	1000±30%	600					
21	MZ 31S04M152N600B	1500±30%	600	100				
22	MZ 31S04M222N600B	2200±30%	600					
23	MZ 31S04M332N600B	3200±30%	600	70				
24	MZ 31S04M472N600B	4700±30%	600	50				
25	MZ 31S04N68RN360B	68±30%	360	200	100±7			
26	MZ 31S04N101N400B	100±30%	400					
27	MZ 31S04N151N400B	150±30%	400					
28	MZ 31S04N221N400B	220±30%	400					
29	MZ 31S04N331N500B	330±30%	500					
30	MZ 31S04N471N500B	470±30%	500					
31	MZ 31S04N681N600B	680±30%	600					

32	MZ 31S04N102N600B	1000±30%	600					
33	MZ 31S04N152N600B	1500±30%	600	100				
34	MZ 31S04P68RN360B	68±30%	360	200	120±7			
35	MZ 31S04P101N400B	100±30%	400					
36	MZ 31S04P151N400B	150±30%	400					
37	MZ 31S04P221N400B	220±30%	400					
38	MZ 31S04P331N500B	330±30%	500					
39	MZ 31S04P471N500B	470±30%	500					
40	MZ 31S04P681N600B	680±30%	600					

N0	Part No	Rated zero Power resistance Rn(Ω)	Withstanding Voltage	Max. W.C I_{max} (mA)	Switching temperature (℃)	Dimensions (mm)		
						D_{max}	T_{max}	d
41	MZ 31S06L68RN420B	68±30%	420	400	50±7	6.5	5.5	0.6
42	MZ 31S06L101N420B	100±30%	420					
43	MZ 31S06L151N500B	150±30%	500					
44	MZ 31S06L221N500B	220±30%	500					
45	MZ 31S06L331N600B	330±30%	600					
46	MZ 31S06L471N600B	470±30%	600					
47	MZ 31S06L681N600B	680±30%	600	300				
48	MZ 31S06L102N600B	1000±30%	600					
49	MZ 31S06L152N600B	1500±30%	600	150				
50	MZ 31S06L222N600B	2200±30%	600	100				
51	MZ 31S06M68RN420B	68±30%	420	400	75±7			
52	MZ 31S06M101N420B	100±30%	420					
53	MZ 31S06M151N500B	150±30%	500					
54	MZ 31S06M221N500B	220±30%	500					
55	MZ 31S06M331N600B	330±30%	600					
56	MZ 31S06M471N600B	470±30%	600					
57	MZ 31S06M681N600B	680±30%	600	300				
58	MZ 31S06M102N600B	1000±30%	600					
59	MZ 31S06M152N600B	1500±30%	600	150				
60	MZ 31S06M222N600B	2200±30%	600	100				
61	MZ 31S06N68RN400B	68±30%	400	400	100±7			
62	MZ 31S06N101N400B	100±30%	400					
63	MZ 31S06N151N400B	150±30%	400					
64	MZ 31S06N221N500B	220±30%	500					
65	MZ 31S06N331N600B	330±30%	600					

66	MZ 31S06N471N600B	470±30%	600					
67	MZ 31S06N681N600B	680±30%	600	300				
68	MZ 31S06N102N600B	1000±30%	600					
69	MZ 31S06P68RN400B	68±30%	400	400	120±7			
70	MZ 31S06P101N400B	100±30%	400					
71	MZ 31S06P151N400B	150±30%	400					
72	MZ 31S06P221N500B	220±30%	500					
73	MZ 31S06P331N600B	330±30%	600					
74	MZ 31S06P471N600B	470±30%	600					

N0	Part No	Rated zero Power resistance Rn(Ω)	Withstanding Voltage	Max. W.C I_{max} (mA)	Switching temperature (℃)	Dimensions (mm)		
						D_{max}	T_{max}	d
75	MZ 31S08L68RN400B	68±30%	400	800	50±7	8.5	5.5	0.6
76	MZ 31S08L101N500B	100±30%	500					
77	MZ 31S08L151N500B	150±30%	500					
78	MZ 31S08L221N600B	220±30%	600					
79	MZ 31S08L331N600B	330±30%	600	600				
80	MZ 31S08L471N600B	470±30%	600	450				
81	MZ 31S08L681N600B	680±30%	600	300				
82	MZ 31S08L102N600B	1000±30%	600	200				
83	MZ 31S08K68RN400B	68±30%	400	800	90±7			
84	MZ 31S08K101N500B	100±30%	500					
85	MZ 31S08K151N500B	150±30%	500					
86	MZ 31S08K221N600B	220±30%	600					
87	MZ 31S08K331N600B	330±30%	600	600				
88	MZ 31S08K471N600B	470±30%	600	450				
89	MZ 31S08K681N600B	680±30%	600	300				
90	MZ 31S08K102N600B	1000±30%	600	200				
91	MZ 31S08N68RN400B	68±30%	400	800	100±7			
92	MZ 31S08N101N500B	100±30%	500					
93	MZ 31S08N151N500B	150±30%	500					
94	MZ 31S08N221N600B	220±30%	600					
95	MZ 31S08N331N600B	330±30%	600	600				
96	MZ 31S08N471N600B	470±30%	600	450				
97	MZ 31S08N681N600B	680±30%	600	300				
98	MZ 31S08N102N600B	1000±30%	600	200				

☆ Designed according to customers request special customized specifications Product。